OTSEGO COUNTY
PLANNING COMMISSION
SPECIAL MEETING
October 26, 2015
6:00 PM

MEETING WILL BE IN THE PLANNING AND ZONING MEETING ROOM LOCATED AT 1322 HAYES ROAD

1. CALL TO ORDER

2. ROLL CALL

3. PLEDGE OF ALLEGIANCE

4. APPROVAL OF MINUTES: None

5. CONSENT AGENDA: None

6. OTHER: None

7. PUBLIC PARTICIPATION FOR ITEMS NOT ON THE AGENDA:
(Please identify yourself for the record. All comments will be limited to two (2) minutes)

8. PUBLIC HEARINGS:

1. Wolverine Power Supply Cooperative Inc, owner is requesting a site plan review for property located in Hayes Township:
5542 Van Tyle Rd/071-003-400-030-00
071-003-300-020-00
071-003-300-025-04
Property is located in a FR/Forest Recreation Zoning District
PZPR15-002- proposed use of the property is the installation of a transmission substation

9. ADVERTISED CASES:

1. Wolverine Power Supply Cooperative Inc, owner is requesting a site plan review for property located in Hayes Township:
5542 Van Tyle Rd/071-003-400-030-00
071-003-300-020-00
071-003-300-025-04
Property is located in a FR/Forest Recreation Zoning District
PZPR15-002- proposed use of the property is the installation of a transmission substation

10. UNFINISHED COMMISSION BUSINESS:

1. Verizon Wireless Tower/247 Old State Rd/*PSUP14-003 Extension*

11. NEW BUSINESS

12. REPORTS AND COMMISSION MEMBER'S COMMENTS

13. ADJOURNMENT

VANTYLE TRANSMISSION STATION PROJECT

WOLVERINE
POWER COOPERATIVE

Application for Site Plan Review

Narrative and Supplemental Information to

Otsego County Zoning Ordinance

Submitted October 7, 2015
Prepared by Joe Hughes
Land Management Supervisor

Section 23.2: APPLICATION FOR SITE PLAN REVIEW

Section 23.2.1.__: The application shall include the following information:

1. **Applicant's name, address, telephone:**
   Wolverine Power Supply Cooperative, Inc.
   Joe Hughes, Land Management Supervisor
   10125 W. Watergate Rd.
   Cadillac MI 49601
   T: 231-775-5700
   E: jhughes@wpsci.com

2. **Proof of property ownership.**
   The subject parcels are owned by Wolverine. Closings on the property purchases were held in June, 2015. Deeds for the subject parcels are included in Appendix 1. There are no liens on the properties as evidenced by the included copes of the Schedule B from each title commitment policy in Appendix 1 with each Deed.

3. **Signed statement that applicant is the owner of the property or officially acting on the owner's behalf.**
   I hereby swear that Wolverine Power Supply Cooperative is the owner of the subject property, as evidenced by the attached warranty deeds in Appendix 1, and that I am submitting this application for a site plan review on behalf of Wolverine Power Supply Cooperative, Inc:

   _____
   Joseph W. Hughes
   Land Management Supervisor

4-8. Name and addresses and Project Title:

Project Title: VanTyle Transmission Station.
Owner, Applicant, Developer: Wolverine Power
Property Info:
Address: 5542 VanTyle Road, Hayes Twp.
Parcel ID Nos: Parcel 1: 003-400-030-00
Parcel 2: 003-300-020-00
Parcel 3: 003-300-025-01 (addressed parcel)

Professionals Involved:

Electrical Engineer	Civil Engineer
Jon Johnson	Charles Christy, P.E.
Wolverine Power	Wade-Trim, Inc.
10125 W. Watergate Rd.	46 Haywood Street, Suite 334
Cadillac MI 49601	Asheville, NC 28801

9. **Project Description:**

The **LOCATION** of the proposed *VanTyle Transmission Station* in Hayes Township, Otsego County is located in Section 3 and northeast of the VanTyle and Coppins Road intersection. The driveway would be off of VanTyle Road from *Parcel 3* and the physical location of the transmission station would be on *Parcels 1 and 2* and be approximately 1,700 feet north of VanTyle Road and over one-half mile east of Coppins Road. It would also be approximately 1,900 feet west of Hayes Tower Road and 1,500 south of Alba Road.

Several maps and aerial photos are also attached in Appendix 2 to help show current conditions and the proposed changes to the subject property. A set of Site Plan Review drawings are also attached to show the features specified in the Site Plan Review requirements of the Zoning Ordinance.

The **NEED** for the proposed VanTyle Transmission Station is due to Wolverine's new Alpine Power Plant currently under construction in Elmira Township, Otsego County. The new power plant will supply power at 138,000 volts via two transmission lines which will connect with the proposed VanTyle Transmission Station. The new transmission lines would be built on Wolverine's existing right-of-way corridor that runs from the existing Elmira Distribution Substation and across the proposed site for the VanTyle Transmission Station.

The **PRIMARY FUNCTIONS** of the proposed VanTyle Transmission Station will be to connect the Alpine Power Plant to Wolverine's existing electric transmission system. Its second function will be to connect the power plant to and existing International Transmission Company (**"ITC"**) 138,000 transmission line which crosses Parcel 3 south of the proposed transmission station. The interconnection to the ITC transmission system will provide improved transmission reliability for both utility companies.

The new transmission station **DIMENSIONS** around the perimeter security fence will be 372 feet x 380 feet which equates to approximately 3.25 acres. The total acreage of Parcels 1 and 2 on which the transmission station will be built is 63.5 acres. The driveway crosses Parcel 3 from VanTyle Road which adds an additional 56.5 acres.

The transmission station will be built in accordance with Wolverine's current design standards which incorporates greater equipment spacing and large vehicle access lanes for improved personnel safety and electrical reliability. This design standard creates a larger substation footprint than Wolverine's existing older stations but reduces the height of the substation equipment. Nearly all of the structures and equipment will be less than 26 feet high. The **TALLEST STRUCTURES** in the substation will be two lightning protection columns that will be approximately 70 feet tall plus a 2" mast that extends and additional 9.75 feet.

There will also be several structures for the transmission line terminations inside the transmission station fence. These "H-frame" structures will be approximately 55 feet tall plus a 9.75 foot long lightning mast (2" dia.) above the H-frame column. The Site Plan Review drawings show the height and locations of the substation equipment on Sheets 3 and 5.

There will be an equipment enclosure building called the "Control House", as shown on the attached Site Plans. The dimensions of this enclosure will be 28'W x 60'L x 14.6'H and is used protect electrical metering and other control equipment from the weather. The typical color of the corrugated steel siding is tan. No other buildings will be located on the property. Utility personnel will routinely visit the substation twice per month for inspections and meter reading. No personnel will be stationed at the substation.

10. Vicinity Map

The Site Plans include a Vicinity Map on Sheet C-0.0.

11. Gross and Net Acreage of the Project:

The total acreage of the subject property is 120 acres for the three parcels. The acreage of the developed area, including the grading areas, temporary construction laydown area along the driveway, and the graveled driveway and parking pad at the transmission station, and turf grass areas, is 16.9 acres.

12. Land Uses, zoning classification, and existing structures on the subject and adjoining parcels:

Subject Parcels:

The three subject parcels are all zoned Forestry Recreation and are vacant except for gas production wells and pipelines and Wolverine's existing 69kV transmission line. Parcels 1 and 2 have been historically used for timber production by the previous owner. There is a portion of the Otsego County Zoning Map and an aerial photo map with property lines that show the general area in Appendix 2.

Adjoining Parcels:

The adjoining parcels north of VanTyle Road are all zoned Forestry Recreation. There is a small parcel of State Land north of Parcel 1 and large parcel of State Land south of Parcel 3 and VanTyle Road, as shown on the attached Zoning Map. the land uses of the adjoining parcels are either vacant or rural residential. There is also a natural gas injection well property surrounded by Parcel 3. The attached aerial photo map identifies the vacant and residential properties surrounding the subject property.

13. **Project completion schedule:**
    The construction work would commence in the fall of 2015 and be completed by July of 2016. Site Restoration would primarily include spreading topsoil and grass seeding would be completed by the summer of 2016 after construction activities have finished.

Section 23.2.2 – Site Plan Requirements

The following narrative provides additional information for items listed in Section 23.2.2 of the Otsego County Zoning Ordinance that are not shown on *Site Plan Review* drawings or that are not applicable to the proposed use of the subject parcel for an electric transmission substation. Additional maps, drawings, and photos are also included in the Appendix to provide supplemental information that may not be shown on the *Site Plan – Proposed Changes*.

1. **Proposed and existing property lines, dimensions, setback lines, monument locations are all shown on the Site Plan.**
   This information is shown on the included *Site Plan Review* drawings.

2. **Topographic elevations are shown on the Site Plan in one- foot intervals.**
   This information is shown on the included *Site Plan Review* drawings.

3. **Type of existing soils at proposed storm water retention basins.**
   The following is an excerpt from the geotechnical site evaluation performed by SME, Inc., at the subject property.

   SOIL CONDITIONS

   The soil conditions generally consisted of about 10 to 13 inches of topsoil underlain by natural sands to the explored depths of the borings. The natural sands exhibited very loose to dense conditions. However, beginning about 18 to 23 feet beneath the ground surface, the sands exhibited medium dense to dense conditions. The soil profile described above and included on the attached boring logs is a generalized description of the conditions encountered. The stratification depths described above and shown on the boring logs indicate a zone of transition from one soil type to another and do not show exact depths of change from one soil type to another. Soil conditions may vary between and away from the boring locations.

   GROUNDWATER CONDITIONS

   Groundwater was not encountered during or upon completion of drilling at the borings. Groundwater was not encountered about 24 hours after completing borings B1 and B2. Based on the granular nature of the subgrade soils at the site, we judge the site groundwater level to be beneath the explored depth of the borings at the time of our field exploration.

4. **Location and type of existing significant vegetation.**
   The vegetation cover is a combination of mature red pine and hardwoods which both have a dense understory regrowth of tree brush. Parcel 1 and 2 are entirely wooded with a combination of mature red pine or hardwoods. Parcel 3

has approximately five acres of mature hardwoods north of the adjoin gas injection well property, scattered pines ranging from 10 to 50 feet tall across the majority of the property with the remainder being open fields that the pines are slowly repopulating. There are also rows of mature red pine at the VanTyle Road driveway entrance parallel to the entire length of the driveway that will access the transmission station.

There will be a minimum of a two hundred foot buffer of existing mature red pine and hardwood trees left remaining around the proposed transmission station development area on Parcel 1. The pines are hardwoods were previously harvested from the interior portions Parcel 1, except for the 200' perimeter buffer. Also, all existing mature red pine trees will remain in the triangular north of the Wolverine transmission line and the proposed transmission station.

5. **Location and elevations of existing water courses and water bodies.**

There are no regulated water courses or water bodies on the proposed site or within 50 feet of the site.

6. **Location of existing and proposed buildings and intended uses.**

A new control house in the substation is shown on the *Site Plan Review Set, Sheet C-2.1.* Its dimensions are 28'W x 60'L x 14.6'H and is used protect electrical metering and other control equipment from the weather. The typical color of the corrugated steel siding is tan. No other buildings will be located on the property. *Sheet 38559-L3* provides elevation and dimension specifications for the control house.

7. **Proposed location of accessory structures, buildings and uses.**

No other accessory structures or buildings will be used.

8. **Location of existing public and private easements.**

This information is shown on the included *Site Plan Review* drawings.

9. **Location and dimensions of proposed streets, drives, curb cuts, access easements.**

This information is shown on the included *Site Plan Review* drawings.

10. **Location, design, and dimensions of existing and/or proposed curbing, barrier free access, carports, parking areas, and fire lanes.**

Only a parking area is included in the site use and it is shown on the included *Site Plan Review* drawings. This area is used for large vehicle and equipment parking during maintenance activities within the substation. Typical vehicles and equipment can include bucket trucks, flat bed semi-trailers, crane, pickup trucks, etc.

11. **Location, size and characteristics of all loading and unloading areas.**
    No such areas are included in the proposed use.

12. **Location and design of sidewalks, walkways, bike paths, and areas for public use.**
    No such facilities or areas are included in the proposed use.

13. **Location of water supply lines and/or wells, and the location of retention ponds.**
    A storm water retention basin is shown on the *Site Plan Review Set, Sheet C-2.1.*

14. **Location of other utilities, including but not limited to, natural gas, electric, cable TV, fiber optics, and telephone.**
    This information is shown on the included *Site Plan Review* drawings.

15. **Proposed location, dimensions and details of common open spaces and common facilities, etc.**
    No such facilities or areas are included in the proposed use.

16. **Location, size and specifications of all signs.**
    Wolverine will install a 20" x 30" No Trespassing sign at the driveway entrance at VanTyle Road on a wood post that will be approximately four feet above grade. See Sheet 991 in the attached drawing set for the sign specifications.

17. **Exterior lighting locations with area of illumination illustrated, type of fixtures and downward shielding to be used.**
    There will only be two yard lights on at night located on the north and south sides of the control house building. The light fixture will be an LED, flat-glass design with full cut-off optics to prevent the horizontal spread of light. Sheet C-2.1 shows the yard light locations on the sides of the Control House and mounted approximately nine feet above grade. The specific fixture has not been selected yet so the illumination pattern is not available at this time.

18. **Location and type of fencing, walls, or other screening devices.**
    A four-strand smooth wire fence that is approximately 48 inches high will be installed along the property lines. A seven foot high chain link fence with barb wire cradles will be installed around the perimeter of the substation equipment, as shown on Sheets 5E6000-84 and -88 provides the security fence specifications.

19. **Location and specifications of all perimeter and internal landscaping and other buffer features.**
    No new landscaping is proposed for the subject property. Because Parcel 1 has mature trees throughout the entire parcel and a minimum two hundred foot buffer of remaining trees will surround the property perimeter, additional landscape plantings will not be utilized. The understory of the property is densely populated

with tree brush which will also screen the substation from view. The nearest houses to the substation are approximately 1,300 to the northwest and south, 1,600 feet to the east, and 2,800' to the west.

20. **Location and size of trash receptacles.**
    No such equipment will be used or needed for the proposed use.

21. **Location and specifications for any existing or proposed above or below ground storage facilities for any chemicals, salts, flammable or hazardous materials.**
    There will be no storage facilities used or required for chemicals, salts, flammable or hazardous materials at the proposed use.

22. **Identification of any significant site amenities or unique natural features.**
    It is Wolverine's belief that there are no such amenities or unique natural features at the subject parcel. The site is characterized by mature red pines, hardwoods, immature scotch pines, and open fields.

23. **Identification of any significant views onto or from the site or from adjoining areas.**
    It is Wolverine's belief that there are no such views given the common tree cover types and flat terrain.

APPENDIX SECTION

APPENDIX 1 – DEEDS AND TITLE COMMITMENTS (Sch. B)

OTSEGO COUNTY
TREASURER'S OFFICE
Gaylord, Mich., 7/1/15

I hereby certify that according to our records all taxes returned to this office are paid for five years preceding the date of this instrument. This does not include taxes in the process of local collection, board of review, PRE denial or tax tribunal.

Linda Sargent, Deputy COUNTY TREASURER

LIBER 1378 PAGE 561

OTSEGO COUNTY MICHIGAN
RECEIVED FOR RECORD
SUSAN DEFEYTER, CLERK/REGISTER OF DEEDS
07/01/2015 9:35:43 AM

RCVD JULY 15 AM 9:32

OTSEGO COUNTY
JULY 1, 2015
RECEIPT #23552

STATE OF MICHIGAN
REAL ESTATE TRANSFER TAX
$ DS $ 147.40-CO
1005.00-ST
STAMP # 9484

WARRANTY DEED

KNOW ALL MEN BY THESE PRESENTS: That Thomas A. Drysdale and Sally Jo Hodgdon, husband and wife, whose address is 5510 Renner Road, Shawnee, KS 66217

Convey(s) and Warrant(s) to Wolverine Power Supply Cooperative, Inc., a Michigan nonprofit corporation., whose address is 10125 W. Watergate Road, Cadillac, MI 49601

the following described premises:

Land situated in the Township of Hayes, County of Otsego, State of Michigan described as:

Commencing at the South 1/4 corner of Section 3, Township 30 North, Range 4 West; thence North 00°08'02" East 1343.16 feet along the North-South 1/4 line to the Point of Beginning; thence North 87°40'05" West 1299.16 feet along the South 1/8 line of said Section 3; thence North 00°17'03" East 776.08 feet along the West 1/8 line of said Section 3; thence South 87°55'07" East 1296.91 feet; thence North 00°08'02" East 561.32 feet along the North-South 1/4 line to the Center of said Section 3; thence South 87°55'07" East 1314.20 feet along the East-West 1/4 line of said Section 3; thence South 00°13'30" West 1337.65 feet along the East 1/8 line of said Section 3; thence North 88°09'20" West 1311.90 feet along the South 1/8 line of said Section 3 to the Point of Beginning.

Tax Parcel No.: 071-003-300-020-00 and 071-003-400-030-00

For the sum of One Hundred Thirty Three Thousand Eight Hundred Dollars and No Cents ($133,800.00) subject to the existing building and use restrictions, easements, and zoning ordinances of record, if any.

Seller reserves all oil, gas and mineral rights. However, Seller shall not have the right to disturb the surface of the Premises in any way to develop or explore for such oil, gas and minerals. Specifically, and not by way of limitation, neither Seller nor its assigns shall have the right to place additional wells, pipelines, roadways or other equipment or facilities on or under the surface, or disturb the surface of the Premises in any way.

The grantor grants to the grantee the right to make All Available division(s) under section 108 of the Land Division Act, Act. No. 288 of the Public Acts of 1967. This property may be located within the vicinity of farmland or a farm operation. Generally accepted agricultural and management practices which may generate noise, dust, odors, and other associated conditions may be used and are protected by the Michigan Right to Farm Act.

Dated June 24, 2015

Signed

Thomas A. Drysdale

Sally Jo Hodgdon

State of Michigan)
) SS
County of Otsego)

On this 23 day of June, 2015, before me personally appeared Thomas A. Drysdale to me known to be the person described in and who executed the foregoing instrument and acknowledged that he executed the same as his free act and deed.

ASHLEE ALVESTEFFER
Notary Public-State of Kansas

_____, Notary Public
_____ County, SMichiganate of

SCHEDULE B

File No.: 412237 **Policy No.: O-9301-003435496**

EXCEPTIONS FROM COVERAGE

This policy does not insure against loss or damage, and the Company will not pay costs, attorneys' fees, or expenses that arise by reason of:

1. Taxes or special assessments which are not shown as existing liens by the public records or which constitute a lien, but are not yet due and payable.
2. Any and all oil, gas, mineral, exploration and extraction rights, and/or reservations thereof which may or may not be recorded.
3. Taxes and assessments that become a lien against the property after date of closing. The Company assumes no liability for tax increases occasioned by retroactive revaluation, changes in the land or usage or loss of any homestead exemption status for the insured premises.
4. Loss or damages sustained or incurred by the insured by reason of a lack of a right of access to and from said land.
5. Lease as set forth in Miscellaneous Liber 7, Page(s) 387, Otsego County Records.
6. Right of Way granted to Northern Michigan Electric Cooperative, Incorporated, and recorded in Miscellaneous Liber K, Page 513, Otsego County Records.
7. Oil and Gas Lease granted to W. B. Phillips as set forth in Liber 127, Page(s) 260 -263, Otsego County Records.
8. Oil and Gas Lease granted to Transocean Oil, Inc. as set forth in Liber 280, Page(s) 68-69, Otsego County Records.
9. Oil and Gas Lease granted to Peak Petro Title Service as set forth in Liber 504, Page(s) 837-838, Otsego County Records.
10. Release and Right-Of-Way granted to Mercury Exploration Company as set forth in Liber 561, Page(s) 595- 597, Otsego County Records.

Copyright 2006-2009 American Land Title Association. All rights reserved.
The use of this Form is restricted to ALTA licensees and ALTA members in good standing as of the date of use.
All other uses are prohibited. Reprinted under license from the American Land Title Association.

OTSEGO COUNTY
TREASURER'S OFFICE
Gaylord, Mich., 6-25-15

I hereby certify that according to our records all taxes returned to this office are paid for five years preceding the date of this instrument. This does not include taxes in the process of local collection, board of review, PRE denial or tax tribunal.

Brooke M. Joynes Deputy COUNTY TREASURER

LIBER 1377 PAGE 820

OTSEGO COUNTY MICHIGAN
RECEIVED FOR RECORD
SUSAN DEFEYTER, CLERK/REGISTER OF DEEDS
06/25/2015 1:52:34 PM

OTSEGO COUNTY
JUNE 25, 2015
RECEIPT #5449

STATE OF MICHIGAN REAL ESTATE TRANSFER TAX
$ 169.40-CL
$ 1155.00-ST
STAMP # 9461

WARRANTY DEED

KNOW ALL MEN BY THESE PRESENTS: That Gerald D. Ebeling and Virginia L. Ebeling, as Trustee(s) of the Gerald D. Ebeling and Virginia L. Ebeling Trust u/a dated April 19, 2002, whose address is 2999 Lake George Rd, Oxford, MI 48370

Convey(s) and Warrant(s) to Wolverine Power Supply Cooperative, Inc., a Michigan nonprofit corporation, whose address is 10125 West Watergate Road, Cadillac, MI 49601

the following described premises:

SEE EXHIBIT "A" ATTACHED HERETO

Tax Parcel No.: Part of 071-003-300-028-01 (071-003-300-025-01 New Number for 2016)

For the sum of One Hundred Fifty Three Thousand Seven Hundred Dollars and No Cents ($153,700.00) subject to the existing building and use restrictions, easements, and zoning ordinances of record, if any.

Seller reserves all oil, gas and mineral rights. However, Seller shall not have the right to disturb the surface of the Premises in any way to develop or explore for such oil, gas and minerals. Specifically, and not by way of limitation, neither Seller nor its assigns shall have the right to place additional wells, pipelines, roadways or other equipment or facilities on or under the surface, or disturb the surface of the Premises in any way without written permission from Buyer, which shall not be unreasonable withheld, conditioned, or delayed.

The grantor grants to the grantee the right to make all available division(s) under section 108 of the Land Division Act, Act. No. 288 of the Public Acts of 1967. This property may be located within the vicinity of farmland or a farm operation. Generally accepted agricultural and management practices which may generate noise, dust, odors, and other associated conditions may be used and are protected by the Michigan Right to Farm Act.

Dated June 24, 2015

Signed

GERALD D. EBELING AND VIRGINIA L. EBELING TRUST

Gerald D. Ebeling
Gerald D. Ebeling
Trustee

Virginia L. Ebeling
Virginia L. Ebeling
Trustee

RCUD JUN25'15PM1:50

State of Michigan)
) SS
County of Otsego)

On this 24 day of June, 2015, before me personally appeared Gerald D. Ebeling and Virginia L. Ebeling as Trustee(s) of the Gerald D. Ebeling and Virginia L. Ebeling Trust u/a dated April 19, 2002 to me known to be the person described in and who executed the foregoing instrument and acknowledged that they executed the same as their free act and deed.

RITA L JOHNSON
NOTARY PUBLIC, STATE OF MICHIGAN
COUNTY OF OTSEGO

Rita L Johnson
_____, Notary Public
County, Michigan

EXHIBIT "A"
LEGAL DESCRIPTION

Land situated in the Township of Hayes, County of Otsego, State of Michigan described as:

Parcel 1- A parcel of land on part of the Southwest 1/4 of Section 3, Township 30 North, Range 4 West, being described as: Beginning at the South 1/4 corner of said Section 3; thence North 87°25'09" West, 802.45 feet along the South line of said Section 3; thence North 00°16'44" East, 871.27 feet; thence North 87°26'38" West, 500.37 feet; thence South 00° 17'03" West, 871.05 feet along the West 1/8 line to said South Section line; thence North 87°25'09" West, 958.01 feet along said South line; thence North 00°25'51" East, 378.79 feet; thence North 87°24'56" West, 344.99 feet to the West line of said Section 3; thence North 00°26'09" East, 607.97 feet along said West line; thence South 87°40'05" East, 1300.07 feet; thence North 00°17'03" East, 344.83 feet along said West 1/8 line of said Section 3; thence South 87°40'05" East, 1299.16 feet along said South 1/8 line of said Section 3; thence South 00°08'02" West, 1343.16 feet along the North-South 1/4 line of said Section 3 to the Point of Beginning.

SCHEDULE B

File No.: 412242 **Policy No.: O-9301-003435495**

EXCEPTIONS FROM COVERAGE

This policy does not insure against loss or damage, and the Company will not pay costs, attorneys' fees, or expenses that arise by reason of:

1. Taxes or special assessments which are not shown as existing liens by the public records or which constitute a lien, but are not yet due and payable.

2. Any and all oil, gas, mineral, exploration and extraction rights, and/or reservations thereof which may or may not be recorded.

3. Taxes and assessments that become a lien against the property after date of closing. The Company assumes no liability for tax increases occasioned by retroactive revaluation, changes in the land or usage or loss of any homestead exemption status for the insured premises.

4. Rights of the public and of any governmental unit in any part thereof taken, used or deeded for street, road or highway purposes.

5. Easement granted to Consumers Power Company as set forth in Liber 68, Page 562, Otsego County Records.

6. Oil and Gas Lease granted to W. B. Phillips as set forth in Liber 125, Page 480, Otsego County Records.

7. Oil and Gas Lease granted to Peak Exploration Company as set forth in Liber 528, Page 181, Otsego County Records.

8. Oil and Gas Lease granted to Northern Michigan Exploration Company as set forth in Liber 244, Page 617, Otsego County Records.

9. Oil and Gas Lease granted to Peak Petro Title Service as set forth in Liber 5094, Page 834, Otsego County Records.

10. Release and Right of Way granted to Mercury Exploration Company as recorded in Liber 561, Page 592, Otsego County Records.

11. Easement granted to Top O'Michigan Rural Electric Company as set forth in Liber 579, Page 497, Otsego County Records.

12. Overhead electric lines as depicted on Mortgage Report by WadeTrim, being Job #WLV2005-03G.

Copyright 2006-2009 American Land Title Association. All rights reserved.
The use of this Form is restricted to ALTA licensees and ALTA members in good standing as of the date of use.
All other uses are prohibited. Reprinted under license from the American Land Title Association.

APPENDIX 2 – MAPS AND AERIAL PHOTO OF PROPERTY

Hayes TWP (North)

T.30N. - R.4W.

N

0.5 0.25 0 0.5 1 Miles

© Otsego County, 2008

See Elmira TWP Page 9

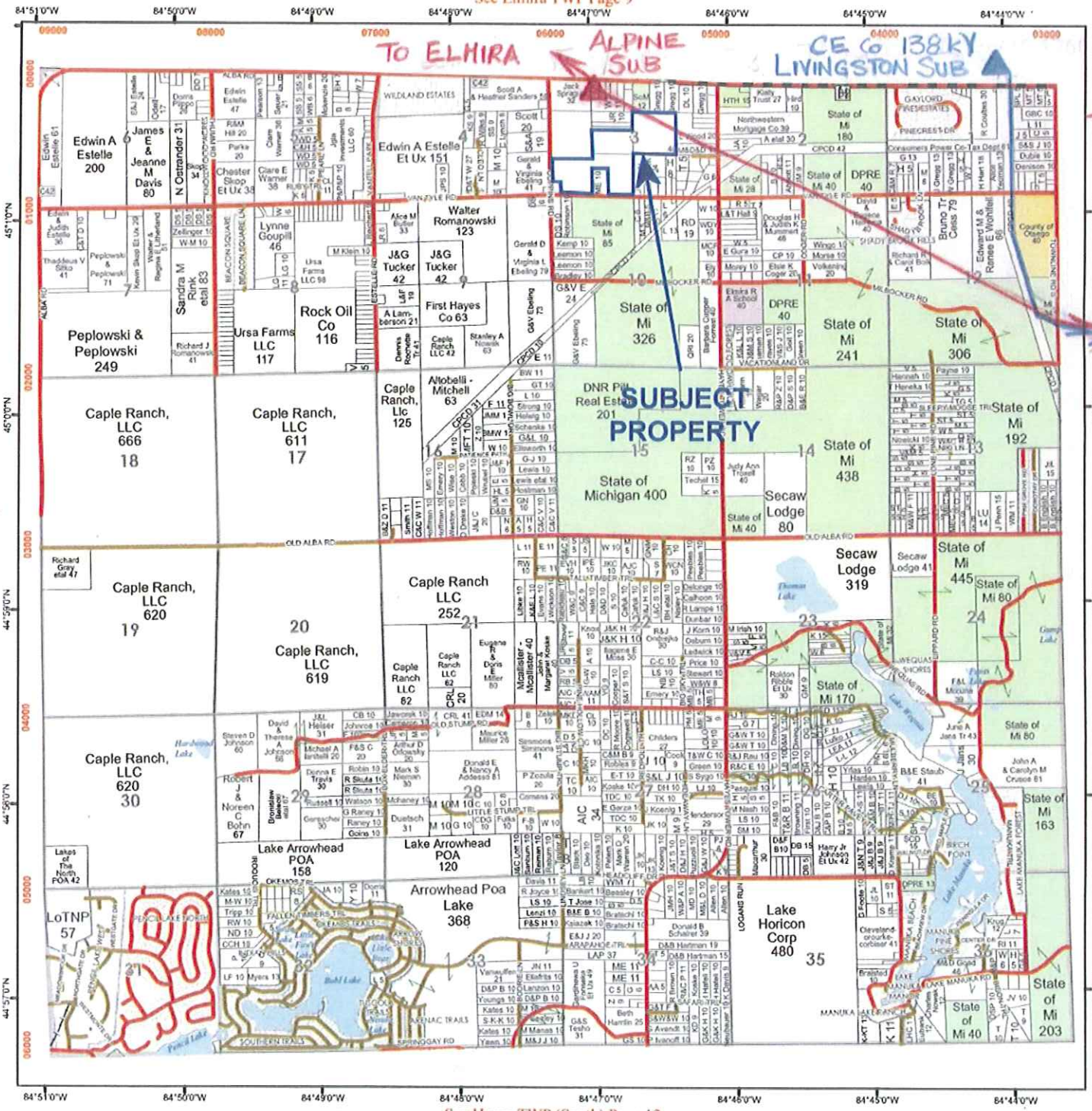

ZONING MAP (Hayes Twp, Section 3 Area)

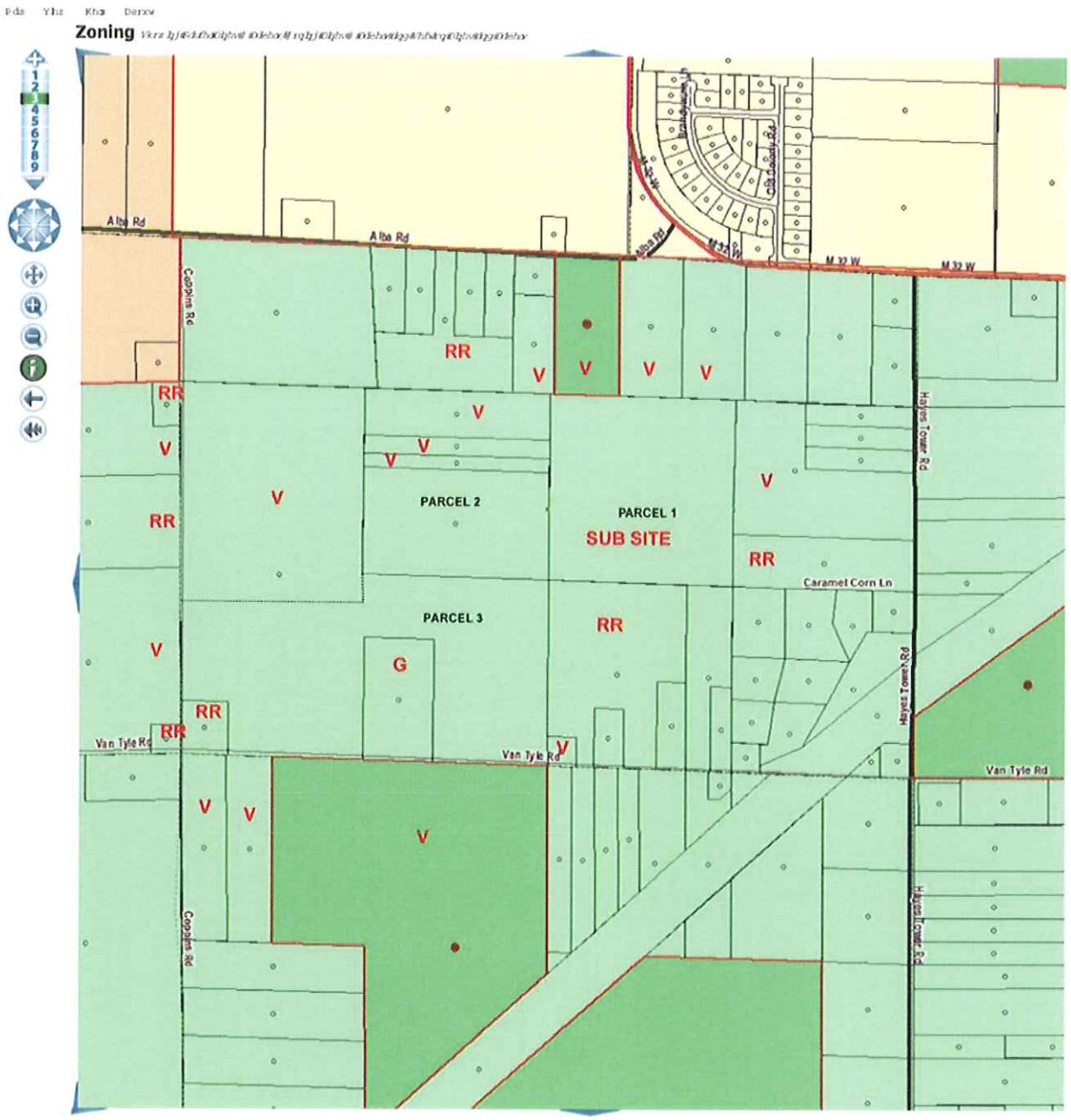

KEY:

- FORESTRY RECREATION ZONING
- STATE LAND
- V VACANT LAND USE
- RR RURAL RESIDENTIAL
- G NATURAL GAS EXTRACTION RELATED

Wolverine Power Cooperative - VanTyle Transmission Substation

Adjacent Land Uses

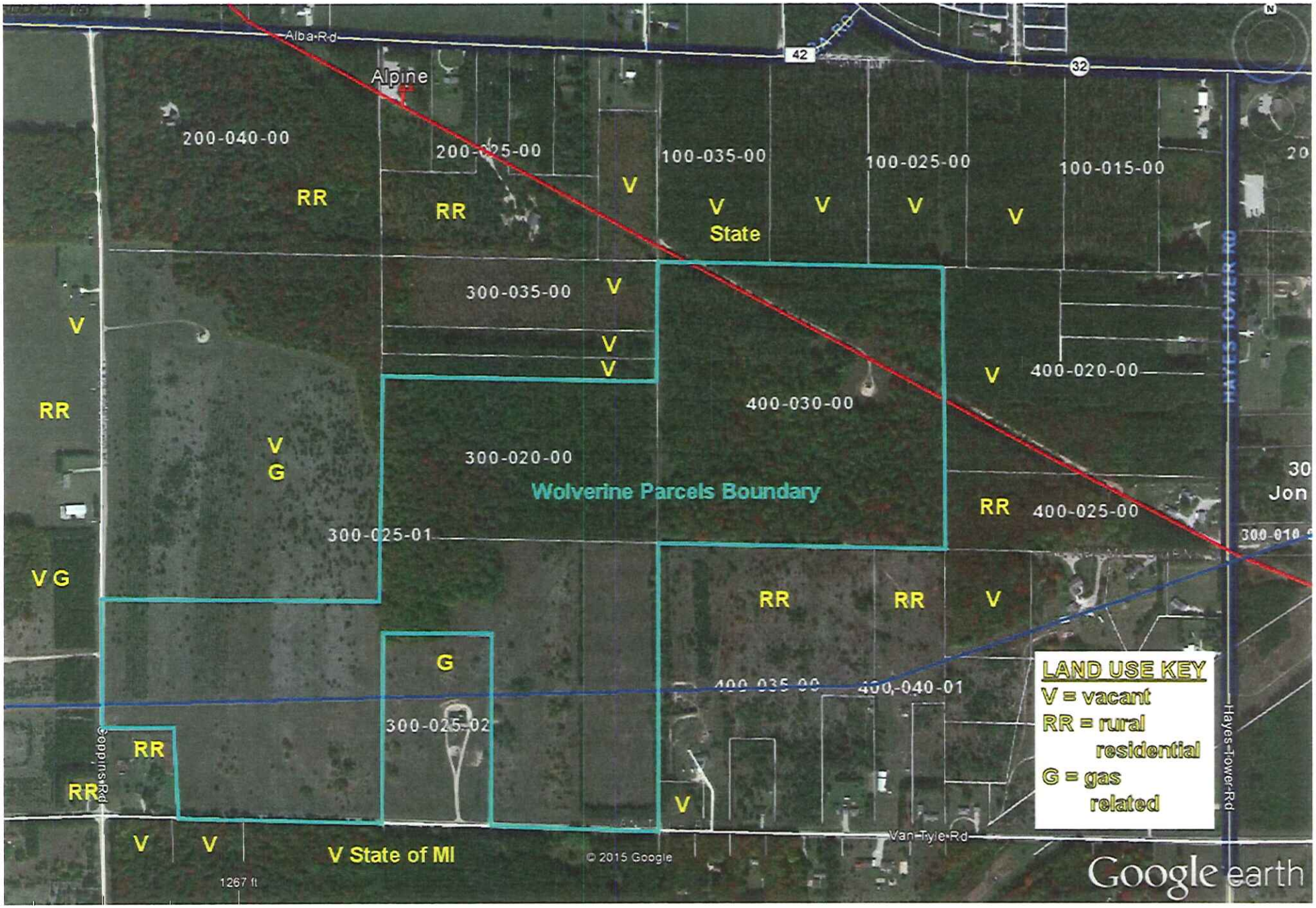

WOLVERINE
POWER COOPERATIVE
10125 W. WATERGATE ROAD, CADILLAC, MI 49601

VAN TYLE TRANSMISSION PROPOSED SUBSTATION

5542 Van Tyle Road
Gaylord, MI 49735

DRAWING SET

DRAWING INDEX

DWG #	TITLE
000	SITE PLAN REVIEW SET
C-0.0	WADE TRIM - COVER SHEET
C-0.1	WADE TRIM - EXISTING CONDITIONS PLAN
C-0.3	WADE TRIM - DEMOLITION - LANDSCAPE PLAN
C-1.0	WADE TRIM - OVERALL SITE PLAN
C-2.1	WADE TRIM - GRADING & DRAINAGE - AREA A
C-2.2	WADE TRIM - GRADING & DRAINAGE - AREA B
C-2.3	WADE TRIM - GRADING & DRAINAGE - AREA C
8645-G27	ELEC & STR LAYOUT - 138kV SECTION VIEWS, ROWS 8 & 10 (SHEET 3)
8645-G27	ELEC & STR LAYOUT - 138kV MISC. SECTIONS & DETAILS (SHEET 5)
5E6000-84	FENCE GROUNDING DETAILS
5E6000-88	SUBSTATION ACCESS INSTALLATION & FENCE GATE DETAILS
38559-L3	SYSTEMS CONTROL - CONTROL HOUSE EXTERIOR ELEVATIONS
991	SUBSTATION SIGN DETAILS

NOT FOR CONSTRUCTION OR INSTALLATION
(ENGINEERING AND FIELD REFERENCE ONLY)

CRITICAL ENERGY INFRASTRUCTURE INFORMATION – DO NOT RELEASE

REV #	DATE	DESCRIPTION
A	10/05/15 RCS	2015 NEW SUBSTATION PRELIMINARY DESIGN – FOR TOWNSHIP MEETING

WOLVERINE
POWER COOPERATIVE
10125 W. WATERGATE ROAD, CADILLAC, MI 49601

THIS DOCUMENT IS THE PROPERTY OF WOLVERINE POWER COOPERATIVE (WPC) AND IS INTENDED SOLELY FOR USE BY WPC AND ITS MEMBERS. ANY USE OR DISTRIBUTION OF THIS INFORMATION FOR PURPOSES OTHER THAN THOSE FOR WHICH WPC INTENDED REQUIRES WRITTEN PERMISSION FROM WPC. WHEN USED FOR ANY UNAPPROVED PURPOSE WPC WILL NOT BE RESPONSIBLE FOR THE ACCURACY OR COMPLETENESS OF THIS DOCUMENT.

VAN TYLE TRANSMISSION

SITE PLAN REVIEW SET

CAD DRAWING VTT 000
DRAWN RCS
ENG.
P.M.
SCALE NONE
ORIGINAL 09/29/15
SHEET 000

L:\Working Files\Transmission Substation\Van Tyle (Alpine Breaker Station)\2015 New Substation\Land Management\VTT 000.dwg Tab:000 10/5/15 6:23:45 PM Robyn Speaks

WOLVERINE
POWER COOPERATIVE

VAN TYLE STATION
HAYES TOWNSHIP
OTSEGO COUNTY, MICHIGAN

UTILITY CONTACTS

LINN ENERGY–GAS
CHRIS ZIMMERMAN
PRODUCTION FOREMAN
PHONE: 989.786.7592 EXT. 1001
FAX: 989.786.9143
CELL: 989.370.7654
CZIMMERMAN@LINNENERGY.COM
4890 AIRPORT RD.
LEWISTON, MI 49756

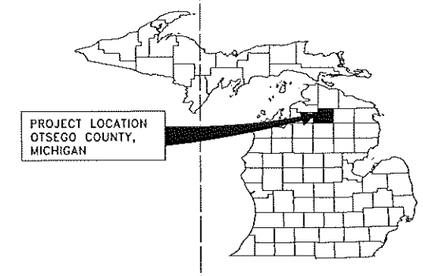

KEY MAP
NOT TO SCALE

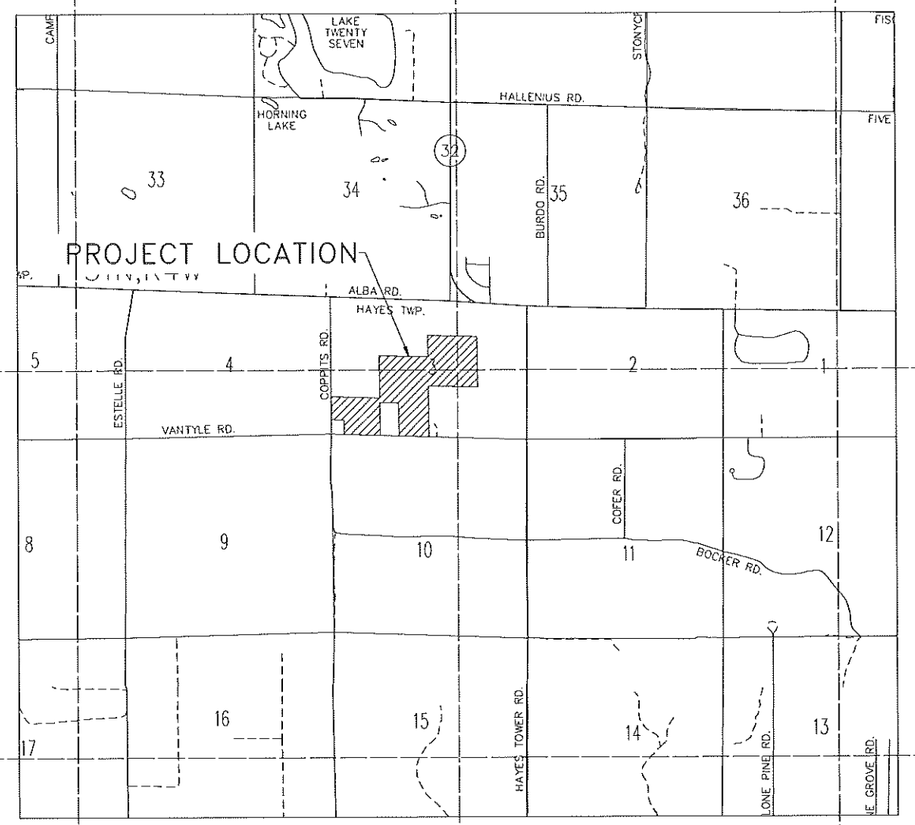

VICINITY MAP
1" = 2000'

SHEET INDEX

		REV.
COVER SHEET	C–0.0	A
EXISTING CONDITIONS PLAN	C–0.1	
SURVEY CONTROL PLAN	C–0.2	
DEMOLITION PLAN	C–0.3	
OVERALL SITE PLAN	C–1.0	
SITE PLAN – AREA A	C–1.1	
SITE PLAN – AREA B & C	C–1.2	
SITE DETAILS	C–1.3	
TEMPORARY FENCE DETAILS	C–1.4	
PERMANENT FENCE DETAILS	C–1.5	
PERMANENT FENCE DETAILS	C–1.6	
GRADING & DRAINAGE – AREA A	C–2.1	A
GRADING & DRAINAGE – AREA B	C–2.2	
GRADING & DRAINAGE – AREA C	C–2.3	
ACCESS ROAD PROFILE (17+50 – 20+67), MISCELLANEOUS DETAILS	C–2.4	A
SOIL EROSION AND SEDIMENTATION CONTROL NOTES	C–3.0	
SESC PLAN – AREA A	C–3.1	A
SESC PLAN – AREA B & C	C–3.2	
SESC DETAILS	C–3.3	
RESTORATION PLAN	C–4.0	

PROJECT CONTACTS

OWNER DELVELOPER: WOLVERINE POWER COOPERATIVE
10125 W. WATERGATE ROAD
PO BOX 229
CADILLAC, MI 49601
JOHNATHAN JOHNSON
PHONE: 231–775–5700
JJOHNSON@WPSCI.COM

PROCESS ENGINEER: POWER BURNS AND ROE
555 BRIARWOOD CIRCLE
SUITE 205
ANN ARBOR, MI 48108
BRENT DUTKIEWICZ, PE
PHONE: 734–519–7202
BRENT.DUTKIEWICZ@POWERENG.COM

SITE/CIVIL ENGINEER: WADE TRIM, INC.
271 WEST MCCOY ROAD
GAYLORD, MI 49735
CHARLES J CHRISTY
PHONE: 828–337–0251
CCHRISTY@WADETRIM.COM

ALL WORK COVERED BY THESE DRAWINGS SHALL BE COMPLETED IN ACCORDANCE WITH THE TECHNICAL SPECIFICATIONS INCLUDED IN THE PROJECT MANUAL AND GEOTECHNICAL EVALUATION REPORT PREPARED BY SME, PROJECT No. 072487.00, TITLED GEOTECHNICAL EVALUATION LETTER, VAN TYLE SUBSTATION AND DATED JULY 16, 2015.

SITE DATA

SITE AREA	120 Acres
ZONING:	FOREST RECREATION
PARCEL NUMBERS:	071–003–300–020–00
	071–003–400–030–00
	071–003–300–025–01
ADDRESS:	YET TO BE ASSIGNED

NOT VALID FOR CONSTRUCTION UNLESS SIGNED AND DATED:

ISSUED FOR: REV A: REVISED PAD GRADING, SEPTEMBER 24, 2015

JOB NO. WLV2005.03G

SHEET C–0.0

WADETRIM
271 West McCoy Road, P.O. Box 618
Gaylord, MI 49735
989.732.3564/800.968.4440
FAX: 989.732.6351
www.wadetrim.com
Building relationships on a foundation of excellence

PREPARED UNDER THE SUPERVISION OF:

Know what's below. Call before you dig.

PROJECT MANAGER: CHARLES CHRISTY
L:\WORKING FILES\TRANSMISSION SUBSTATION\VAN TYLE (ALPINE, BROCKER, STARGON)\2015 NEW SUBSTATION\LAND MANAGEMENT\GDS-PLTS-COVER.DWG – C-0.0 – PLOTTED 10/2/2015 11:11 AM BY ROBYN SPEARS
FIELD BOOK INFORMATION:

© Wade Trim Group, Inc.

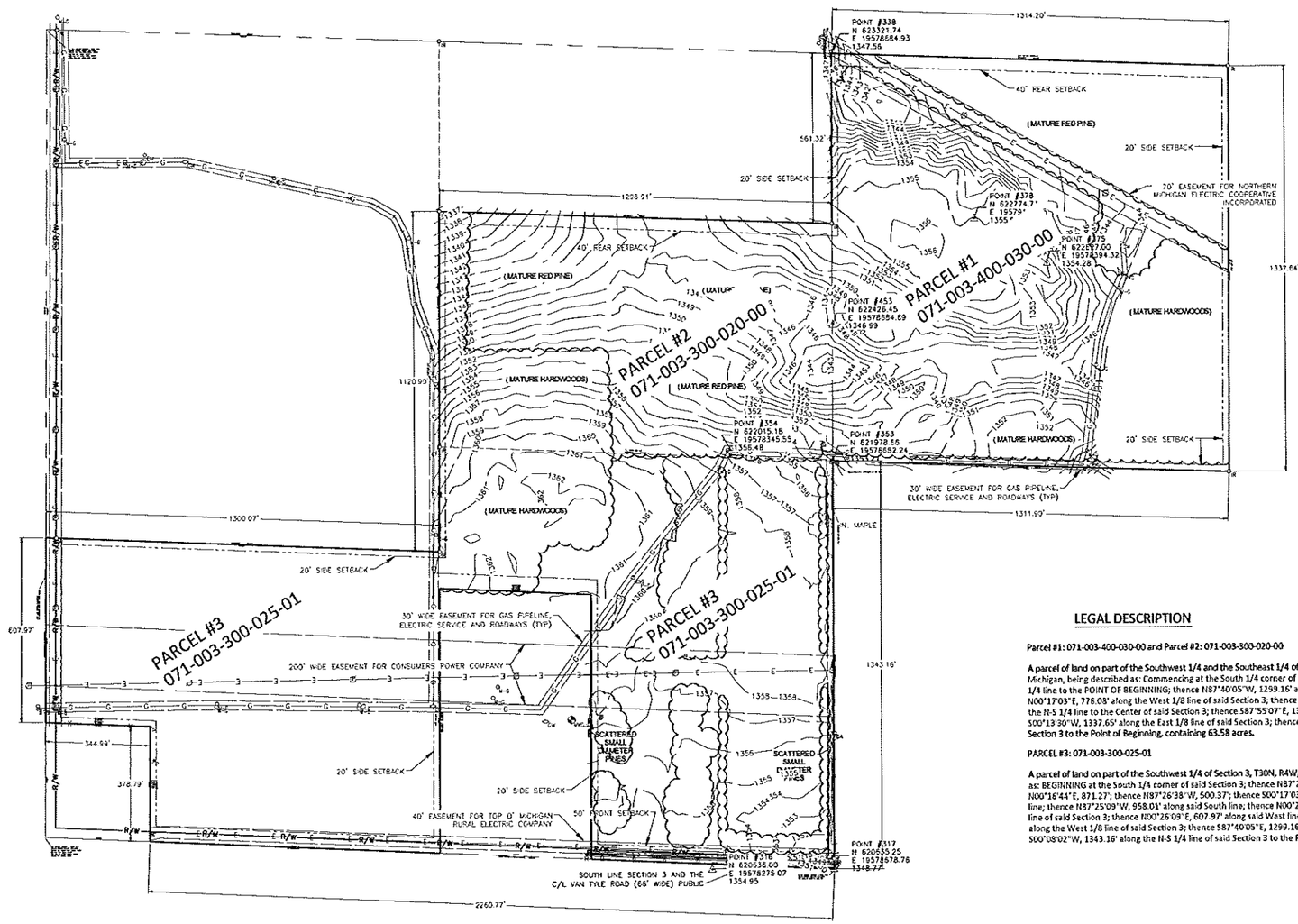

LEGAL DESCRIPTION

Parcel #1: 071-003-400-030-00 and Parcel #2: 071-003-300-020-00

A parcel of land on part of the Southwest 1/4 and the Southeast 1/4 of Section 3, T30N, R4W, Hayes Township, Otsego County, Michigan, being described as: Commencing at the South 1/4 corner of said Section 3; thence N00°08'02"E, 1343.16' along the N-S 1/4 line to the POINT OF BEGINNING; thence N87°40'05"W, 1299.16' along the South 1/8 line of said Section 3; thence N00°17'03"E, 776.08' along the West 1/8 line of said Section 3; thence S87°55'07"E, 1296.91'; thence N00°08'02"E, 561.32' along the N-S 1/4 line to the Center of said Section 3; thence S87°55'07"E, 1314.20' along the E-W 1/4 line of said Section 3; thence S00°13'30"W, 1337.65' along the East 1/8 line of said Section 3; thence N88°09'20"W, 1311.90' along the South 1/8 line of said Section 3 to the Point of Beginning, containing 63.58 acres.

PARCEL #3: 071-003-300-025-01

A parcel of land on part of the Southwest 1/4 of Section 3, T30N, R4W, Hayes Township, Otsego County, Michigan, being described as: BEGINNING at the South 1/4 corner of said Section 3; thence N87°25'09"W, 802.45' along the South line of said Section 3; thence N00°16'44"E, 871.27'; thence N87°26'38"W, 500.37'; thence S00°17'03"W, 871.05' along the West 1/8 line to said South Section line; thence N87°25'09"W, 958.01' along said South line; thence N00°25'51"E, 378.79'; thence N87°24'56"W, 344.99' to the West line of said Section 3; thence N00°26'09"E, 607.97' along said West line; thence S87°40'05"E, 1300.07'; thence N00°17'03"E, 344.83' along the West 1/8 line of said Section 3; thence S87°40'05"E, 1299.16' along the South 1/8 line of said Section 3; thence S00°08'02"W, 1343.16' along the N-S 1/4 line of said Section 3 to the Point of Beginning, containing 56.55 acres.

LEGEND

- PARCEL BOUNDARY
- PARCEL LINES OF INDIVIDUAL PROPERTIES
- SECTION LINES
- RIGHT OF WAY LINE
- BURIED GAS LINE
- OVERHEAD ELECTRIC LINE(S)
- MAJOR CONTOUR
- MINOR CONTOUR
- TREE LINE
- SECTION CORNER (AS NOTED)
- POWER POLE
- TELEPHONE PEDESTAL
- SOIL BORING (AS NOTED)
- GAS WELL
- UNDERGROUND GAS LINE MARKER
- UNDERGROUND PHONE LINE MARKER
- DECIDUOUS TREE (AS NOTED)

811 Know what's below. Call before you dig.

PROJECT MANAGER: JASON CAMERON
L:\WORKING FILES\TRANSMISSION SUBSTATION\VAN TYLE (ALPINE BREAKER STATION)\2015 NEW SUBSTATION\LAND MANAGEMENT\VGP-PLTS-EXISTING CONDITIONS.DWG - C-0.1 - PLOTTED 10/5/2015 4:51 PM BY ROBYN SPEARS
FIELD BOOK INFORMATION:

REV#	DATE	DESCRIPTION	BY
A	10/02/15	FIX PARCEL IDENTIFICATION FOR TOWNSHIP MTNG.	RCS

NOT VALID FOR CONSTRUCTION UNLESS SIGNED AND DATED:

WADE TRIM
271 West McCoy Road, P.O. Box 618
Gaylord, MI 49735
PHONE: 989.732.8000
FAX: 989.732.8081
www.wadetrim.com

Building relationships on a foundation of excellence.

WOLVERINE POWER COOPERATIVE
VAN TYLE STATION
Hayes Township, Otsego County, MI

EXISTING CONDITIONS PLAN

ISSUED FOR:	DATE:	BY:
75% REVIEW	7/15/15	CJC
95% REVIEW	8/18/15	CJC
PERMIT	8/27/15	CJC
BID	9/10/15	CJC

JOB NO. WLV2005.03G

SHEET C-0.1

VAN TYLE STATION, HAYES TOWNSHIP, OTSEGO COUNTY, MICHIGAN

© Wade Trim Group, Inc.

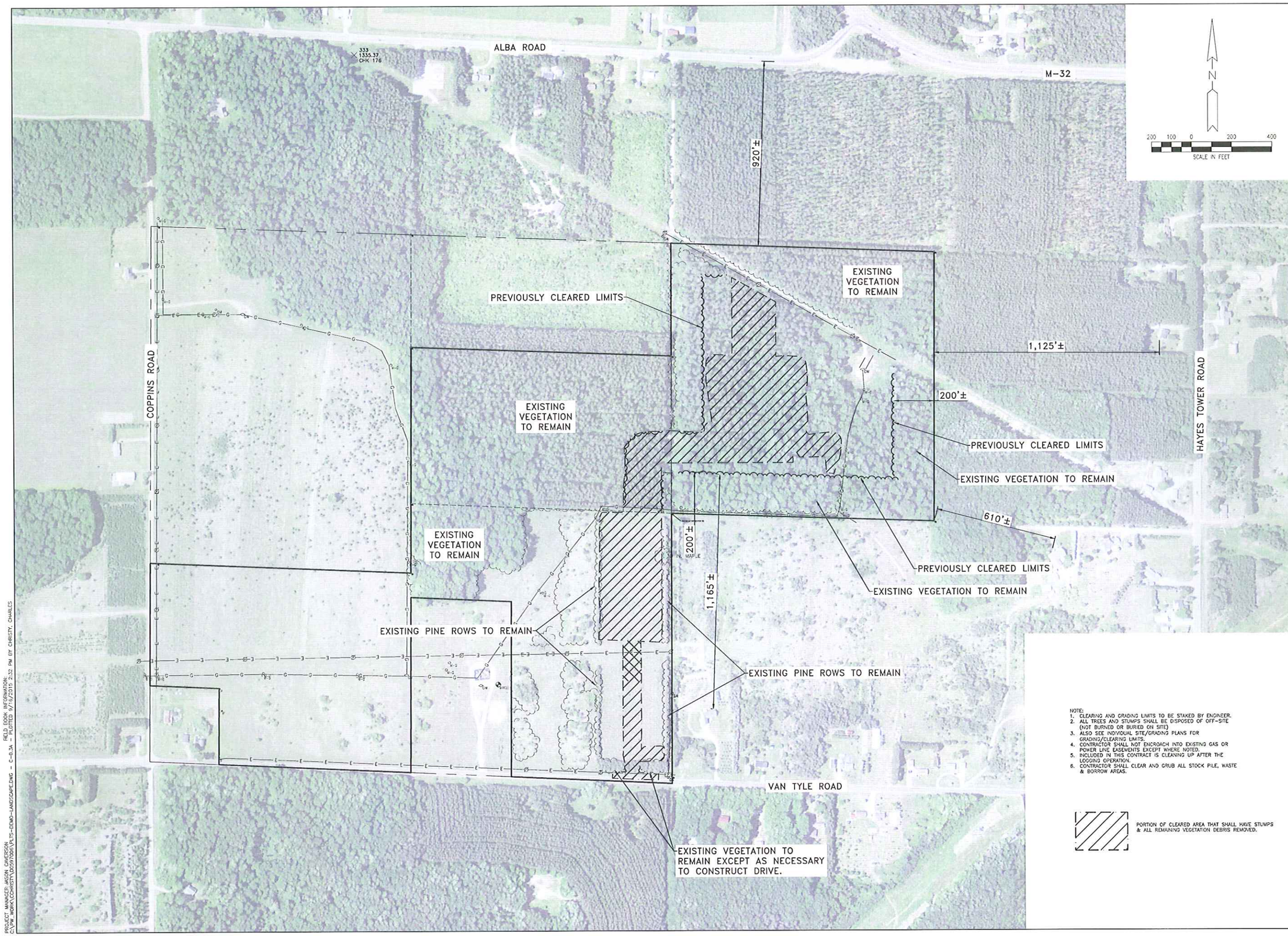

NOTE:
1. CLEARING AND GRADING LIMITS TO BE STAKED BY ENGINEER.
2. ALL TREES AND STUMPS SHALL BE DISPOSED OF OFF-SITE (NOT BURNED OR BURIED ON SITE)
3. ALSO SEE INDIVIDUAL SITE/GRADING PLANS FOR GRADING/CLEARING LIMITS.
4. CONTRACTOR SHALL NOT ENCROACH INTO EXISTING GAS OR POWER LINE EASEMENTS EXCEPT WHERE NOTED.
5. INCLUDED IN THIS CONTRACT IS CLEANING UP AFTER THE LOGGING OPERATION.
6. CONTRACTOR SHALL CLEAR AND GRUB ALL STOCK PILE, WASTE & BORROW AREAS.

PORTION OF CLEARED AREA THAT SHALL HAVE STUMPS & ALL REMAINING VEGETATION DEBRIS REMOVED.

REV#	DATE	DESCRIPTION	BY

NOT VALID FOR CONSTRUCTION UNLESS SIGNED AND DATED:

WADETRIM
271 West McCoy Road, P.O. Box 618
Gaylord, MI 49735
989.732.3584/800.968.4440
FAX: 989.732.6391
www.wadetrim.com

Building relationships on a foundation of excellence

WOLVERINE POWER COOPERATIVE
VAN TYLE STATION
Hayes Township, Otsego County, MI

DEMOLITION – LANDSCAPE PLAN

ISSUED FOR:	DATE:	BY:
REVIEW	9/16/15	CJC

JOB NO. WLV2005.03G

SHEET C-0.3a

© Wade Trim Group, Inc.

VAN TYLE STATION, HAYES TOWNSHIP, OTSEGO COUNTY, MICHIGAN

PROJECT MANAGER: JASON CAVERSON
C:\PW_WORK\CCHRISTY\D0597006\PLTS-DEMO-LANDSCAPE.DWG - C-0.3A - PLOTTED 9/16/2015 2:32 PM BY CHRISTY, CHARLES
FIELD BOOK INFORMATION:

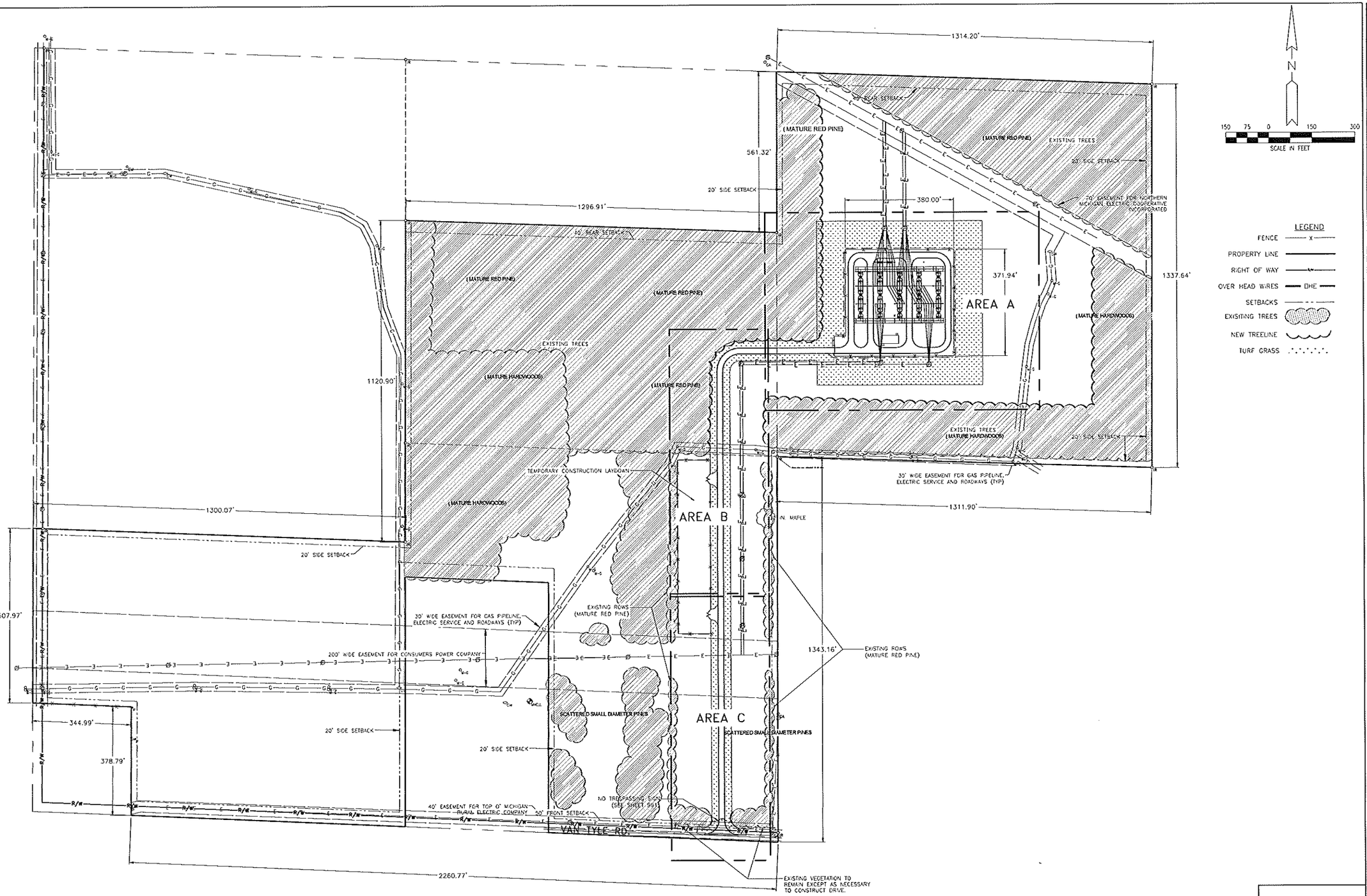

PROJECT MANAGER:
FIELD BOOK INFORMATION:
L:\WORKING FILES\TRANSMISSION SUBSTATION\VAN TYLE (ALPINE BREAKER STATION)\2015 NEW SUBSTATION\LAND MANAGEMENT\PLTS-SITE.DWG - C-1.0 - PLOTTED 10/5/2015 6:42 PM BY ROBYN SPEAKS

811 Know what's below. Call before you dig.

REV#	DATE	DESCRIPTION	BY
A	09/28/15	SHOW EXISTING VEGETATION FOR TOWNSHIP MTNG.	RCS

NOT VALID FOR CONSTRUCTION UNLESS SIGNED AND DATED:

WADETRIM
271 West McCoy Road, P.O. Box 818
Gaylord, MI 49735
989.732.3584/800.983.4440
FAX: 989.732.6391
www.wadetrim.com

Building relationships on a foundation of excellence

WOLVERINE POWER COOPERATIVE
VAN TYLE STATION
Hayes Township, Otsego County, MI

OVERALL SITE PLAN

ISSUED FOR:	DATE:	BY:
75% REVIEW	7/15/15	CJC
95% REVIEW	8/24/15	CJC
PERMIT	8/27/15	CJC
BID	9/10/15	CJC

JOB NO. WLV2005.03G

SHEET C-1.0

© Wade Trim Group, Inc.

VAN TYLE STATION, HAYES TOWNSHIP, OTSEGO COUNTY, MICHIGAN

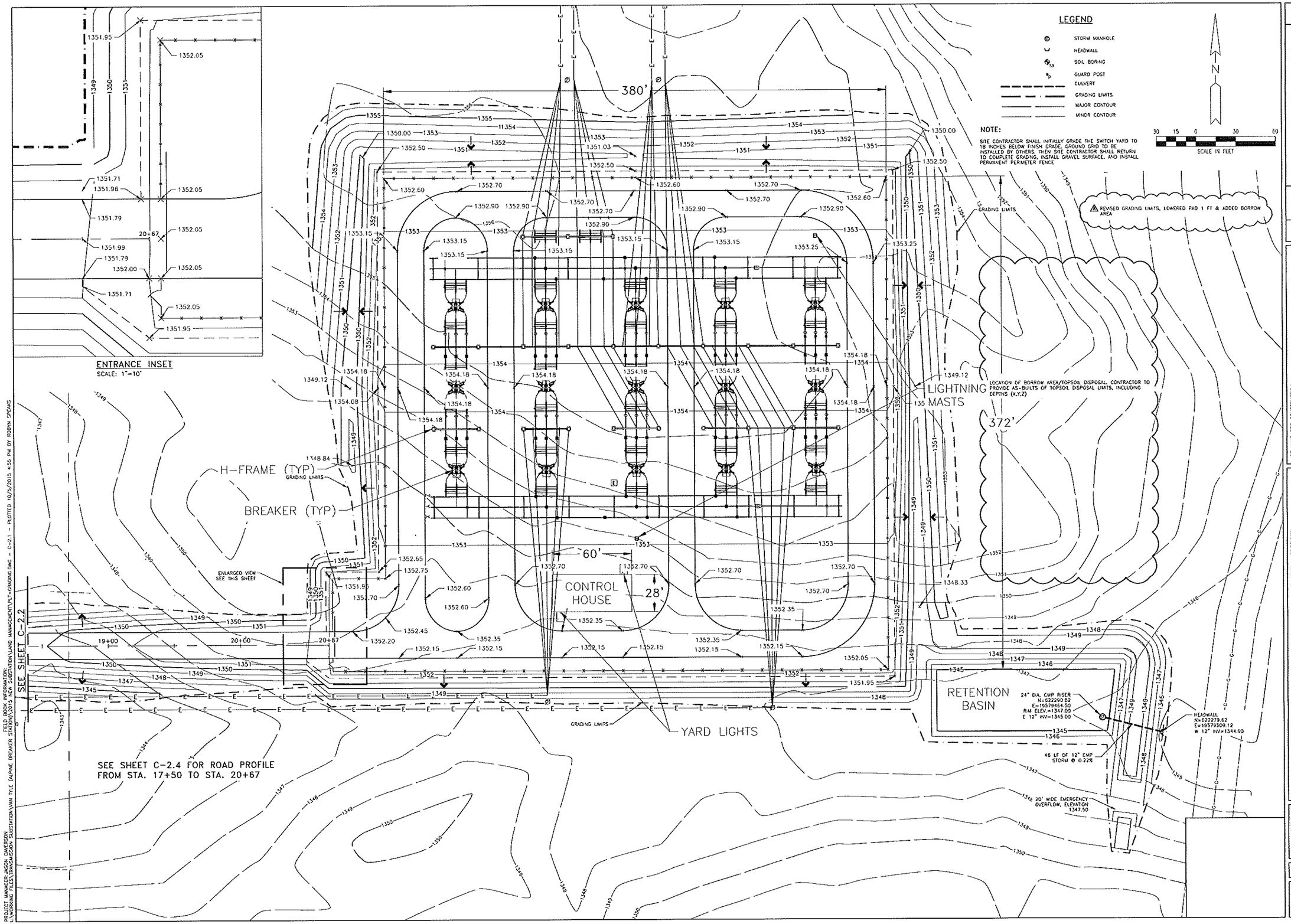

REV#	DATE	DESCRIPTION	BY
B	9/29/15	INDICATE DRAINAGE FLOWS FOR TOWNSHIP MTNG.	RCS
A	9/24/15	PAD GRADING & BORROW AREA	CJC

NOT VALID FOR CONSTRUCTION UNLESS SIGNED AND DATED.

WADETRIM

271 West McCoy Road, P.O. Box 618
Gaylord, MI 49735
609.732.3504/800.968.4445
FAX: 609.732.0381
www.wadetrim.com

Building relationships on a foundation of excellence

WOLVERINE POWER COOPERATIVE
VAN TYLE STATION
Hayes Township, Otsego County, MI

GRADING & DRAINAGE - AREA A

ISSUED FOR:	DATE:	BY:
75% REVIEW	7/15/15	CJC
95% REVIEW	8/24/15	CJC
PERMIT	8/27/15	CJC
BID	9/10/15	CJC

JOB NO. WLV2005.03G

SHEET C-2.1

VAN TYLE STATION, HAYES TOWNSHIP, OTSEGO COUNTY, MICHIGAN

© Wade Trim Group, Inc.

PROJECT MANAGER: JASON CAVERSON
L:\WORKING FILES\TRANSMISSION SUBSTATION\VAN TYLE (ALPINE BREAKER STATION)\2015 NEW SUBSTATION\LAND MANAGEMENT\PLT-GRADING.DWG - C-2.1 - PLOTTED 10/5/2015 4:55 PM BY ROBYN SPEAKS
FIELD BOOK INFORMATION:

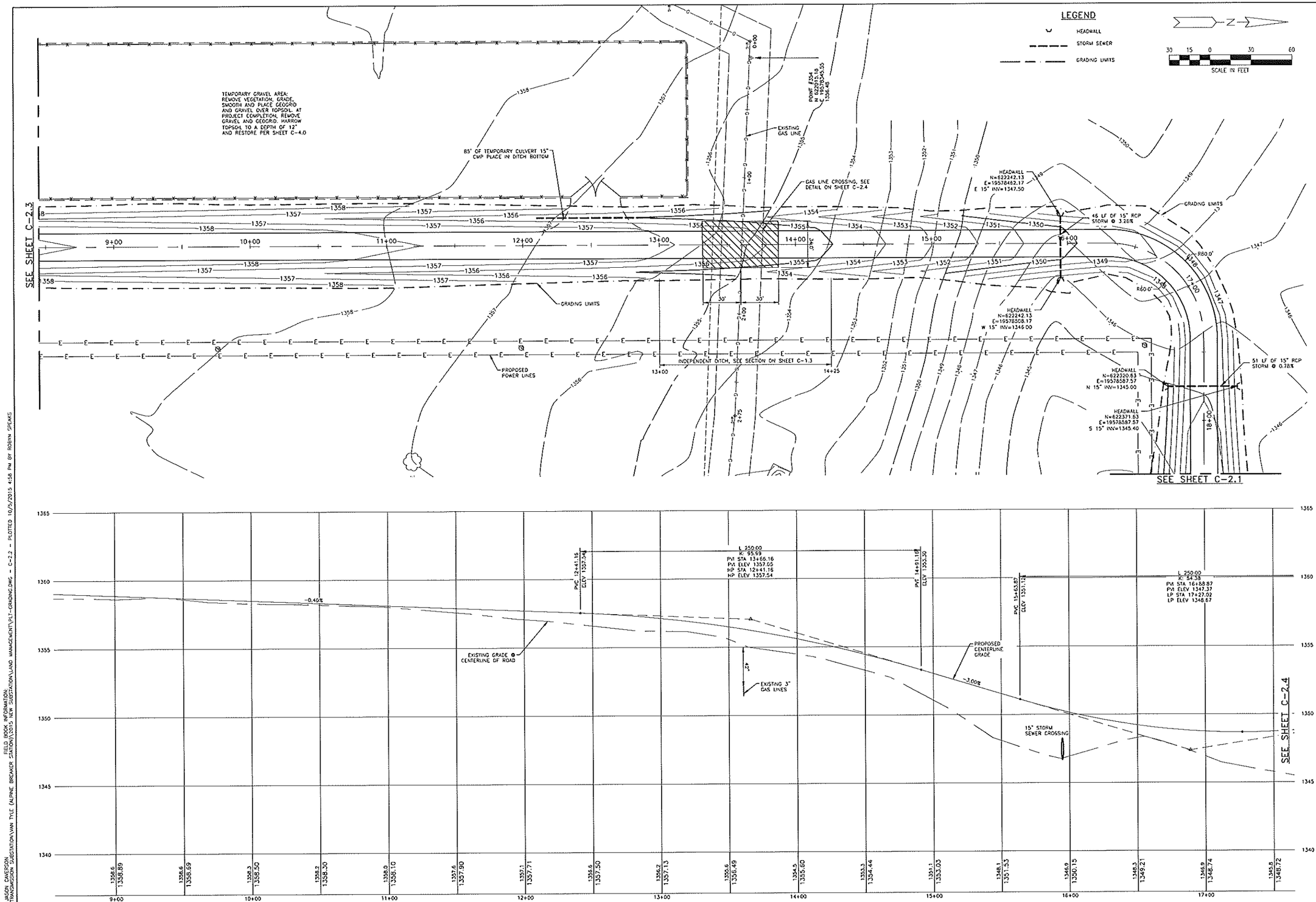

ACCESS ROAD PROFILE (8+50 - 17+50)

SCALE: 1"=30' HORIZ., 1"=3' VERT.

REV#	DATE	DESCRIPTION	BY

NOT VALID FOR CONSTRUCTION UNLESS SIGNED AND DATED:

WADETRIM

271 West McCoy Road, P.O. Box 610
Gaylord, MI 49735
800.722.3584/800.968.4440
FAX: 800.722.0391
www.wadetrim.com

Building relationships on a foundation of excellence

WOLVERINE POWER COOPERATIVE
VAN TYLE STATION
Hayes Township, Otsego County, MI

GRADING & DRAINAGE - AREA B

ISSUED FOR:	DATE:	BY:
75% REVIEW	7/15/15	CJC
95% REVIEW	8/24/15	CJC
PERMIT	8/27/15	CJC
BID	9/10/15	CJC

JOB NO. WLV2005.03G

SHEET C-2.2

©Wade Trim Group, Inc.

VAN TYLE STATION, HAYES TOWNSHIP, OTSEGO COUNTY, MICHIGAN

PROJECT MANAGER: JASON CAVERSON
FIELD BOOK INFORMATION:
L:\WORKING FILES\TRANSMISSION SUBSTATION\VAN TYLE (ALPINE BREAKER STATION)\2015 NEW SUBSTATION\LAND MANAGEMENT\PLT-GRADING.DWG - C-2.2 - PLOTTED 10/5/2015 4:58 PM BY ROBYN SPEAKS

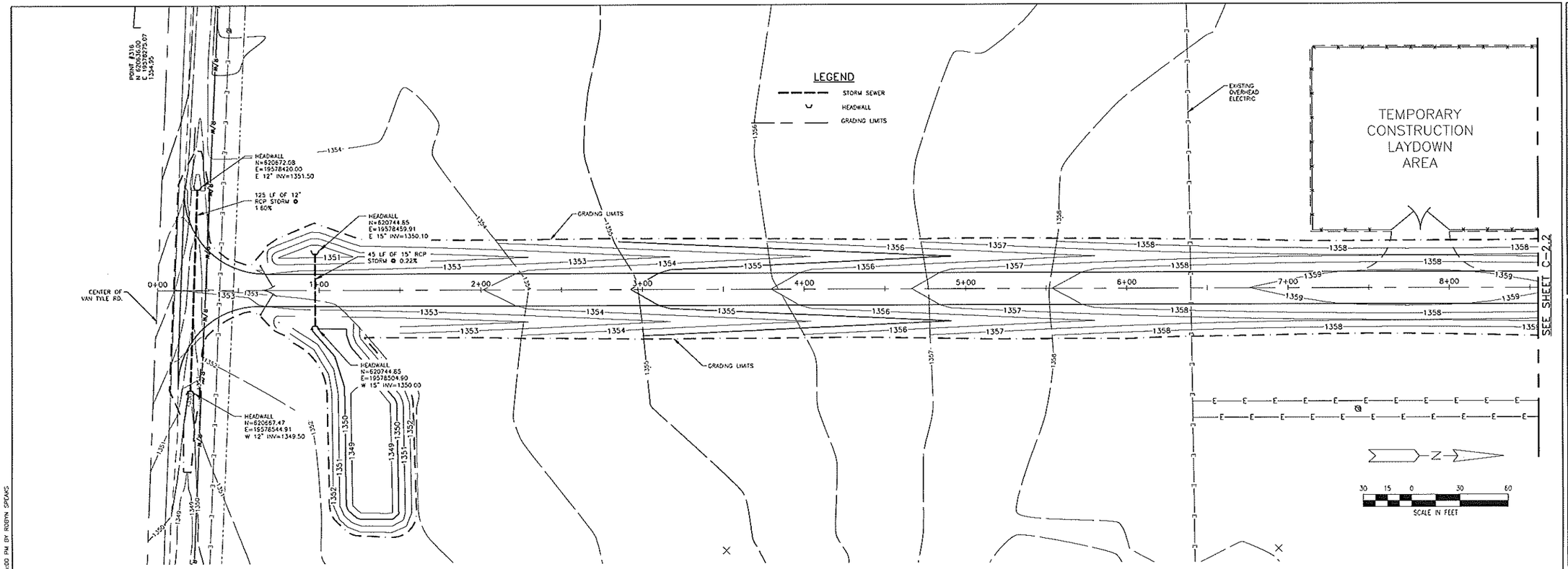

ACCESS ROAD PROFILE (0+10.51 – 8+50)

SCALE: 1"=30' HORIZ., 1"=3' VERT.

811 Know what's below. Call before you dig.

PROJECT MANAGER: JASON CAVERSON
L:\WORKING FILES\TRANSMISSION SUBSTATION\VAN TYLE (ALPINE BREAKER STATION)\2015 NEW SUBSTATION\LAND MANAGEMENT\PLT-GRADING.DWG - C-2.3 - PLOTTED 10/5/2015 5:00 PM BY ROBYN SPEAKS

FIELD BOOK INFORMATION:

REV#	DATE	DESCRIPTION	BY
A	10/05/15	INDICATE TEMP. CONST. LAYDOWN AREA	RCS

NOT VALID FOR CONSTRUCTION UNLESS SIGNED AND DATED:

WADETRIM
271 West McCoy Road, P.O. Box 616
Gaylord, MI 49735
989.732.3584/800.585.4440
FAX: 989.732.8391
www.wadetrim.com

Building relationships on a foundation of excellence

WOLVERINE POWER COOPERATIVE
VAN TYLE STATION
Hayes Township, Otsego County, MI

GRADING & DRAINAGE – AREA C

ISSUED FOR:	DATE:	BY:
75% REVIEW	7/15/15	CJC
95% REVIEW	8/24/15	CJC
PERMIT	8/27/15	CJC
BID	9/10/15	CJC

JOB NO. WLV2005.03G

SHEET C-2.3

VAN TYLE STATION, HAYES TOWNSHIP, OTSEGO COUNTY, MICHIGAN

© Wade Trim Group, Inc.

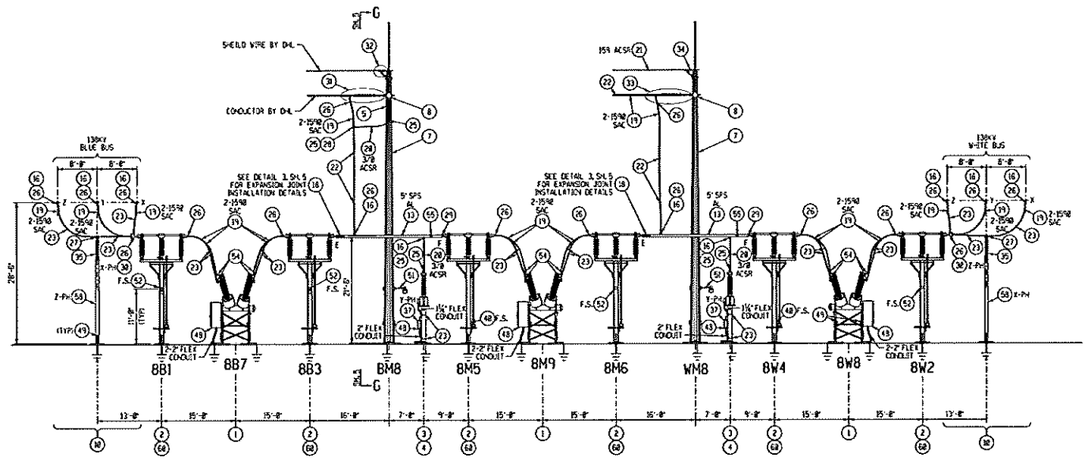

SECTION '8-8'
(SH.1)

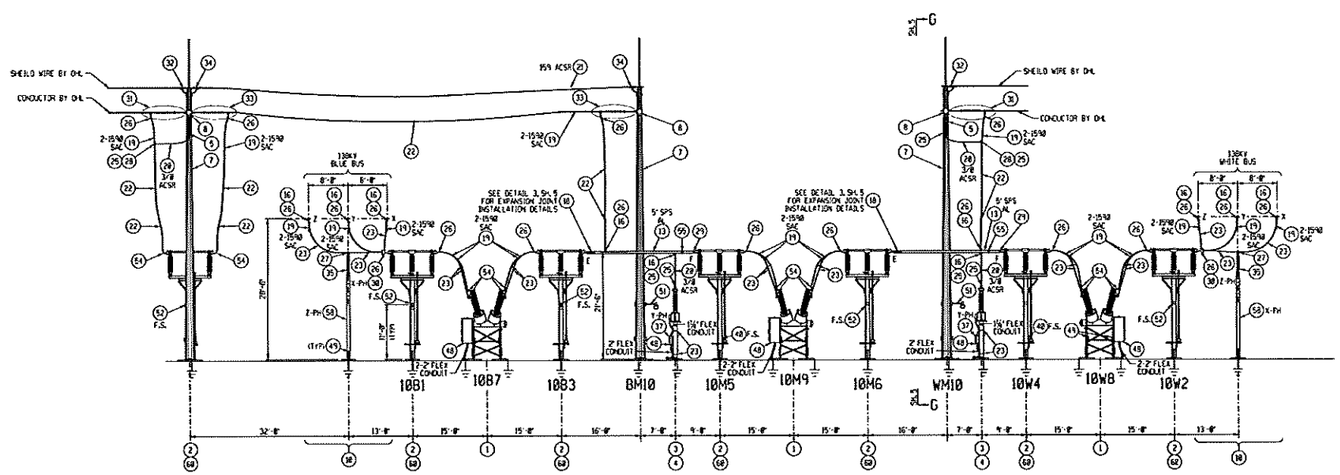

SECTION '10-10'
(SH.1)

NOTES:

1. FOR MINIMUM ELECTRICAL DESIGN CLEARANCES, SEE DWG E6200-48.
2. OVERHEAD TRANSMISSION CONSTRUCTION (OTC) WILL SUPPLY CONDUCTORS AND ALL HARDWARE NECESSARY TO TERMINATE LINES AND SHIELD WIRES AT THE FIRST STATION STEEL, LEAVING A CONNECTION POINT TO CONNECT THE STATION CONDUCTOR AS SHOWN ON ELEVATIONS. (FIRST STATION STEEL IS THE FIRST STRUCTURE ON THE STATION OR SUBSTATION THAT IS ORDERED AND INSTALLED BY STATION ENGINEERING.)

LEGEND:

S - SLIP FIT
F - FIXED FIT
E - EXPANSION FIT
F.S. - FAR SIDE

DRAWING NO.	REFERENCE DRAWINGS
27, SH.1	ELEC & STR LAYOUT - 138KV PLAN VIEW
27, SH.5	ELEC & STR LAYOUT - 138KV MISCELLANEOUS SECTIONS AND DETAILS
32, SH.1	LIGHT & CONTROL CONDUIT LAYOUT 138KV YARD PLAN VIEW

REV	DATE	DESCRIPTION	BY	APP	REV	DATE	DESCRIPTION	BY	APP	REV	DATE	DESCRIPTION	BY	APP

		DATE
DR.	J. PORENSA/PEI	XX/XX/15
CK.	B. OUTKIEVICZ/PEI	XX/XX/15
SECTION HEAD		
APP.		
DIVISION HEAD		
APP.		
DEPARTMENT HEAD		
APP.	XXX/PEI	XX/XX/15

ELEC & STR LAYOUT - 138KV SECTION VIEWS ROWS 8 & 10

VAN TYLE — SUBSTATION

SCALE	DRAWING NO.	SHEET	REV.
3/32" = 1'-0"	8645-G27	3	-
JOB XXX			

PDL 8645T-1

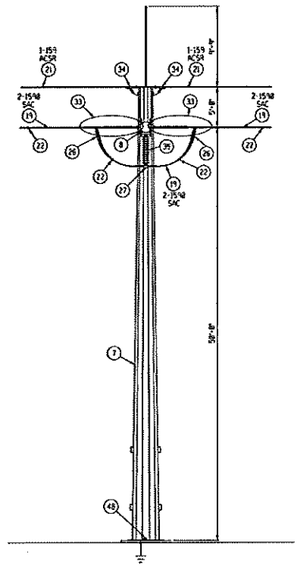

SECTION A-A
(NOT TO SCALE)
(SHL 1)

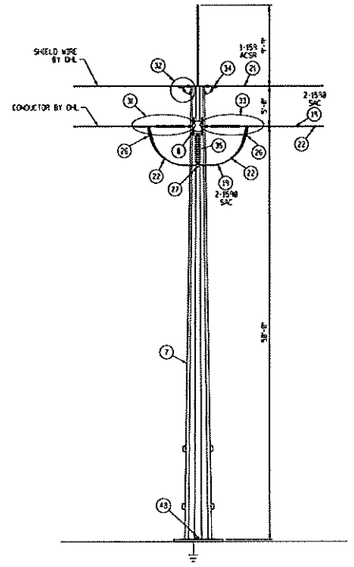

SECTION B-B
(NOT TO SCALE)
(SHL 1)

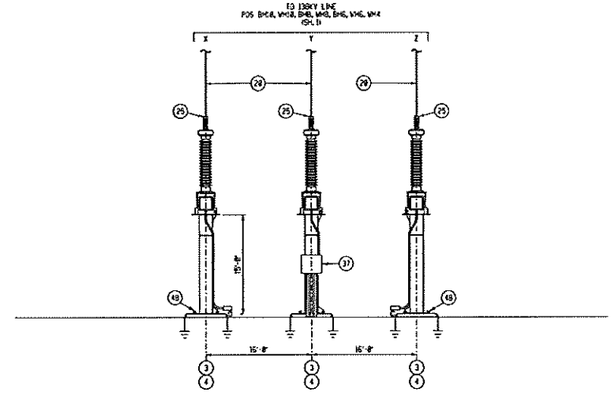

SECTION C-C

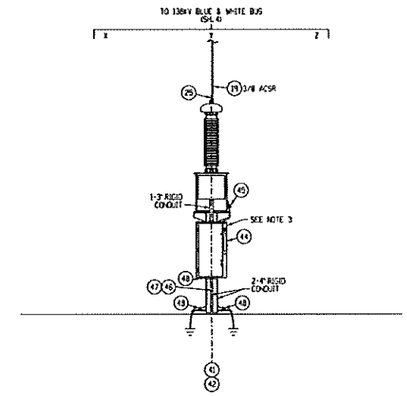

SECTION D-D

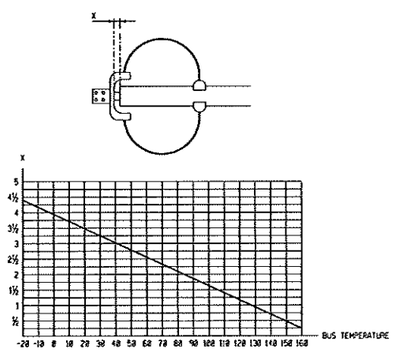

DETAIL 3
EXPANSION JOINT SPACING

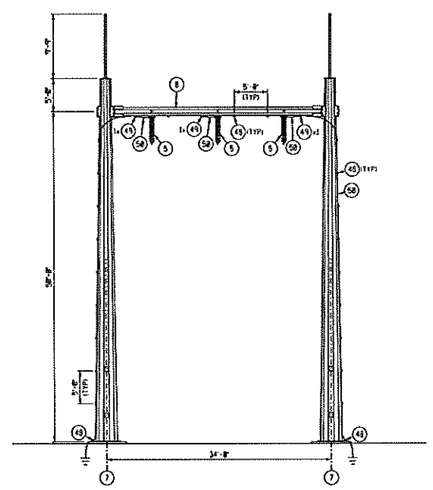

SECTION G-G
SURGE ARRESTER GROUNDING ON H-FRAMES
(SHL 2 & 3)

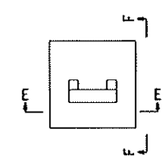

DETAIL 1
AC CAB
(NOT TO SCALE)
(SHL 1)

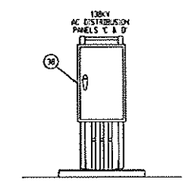

SECTION E-E
(NOT TO SCALE)

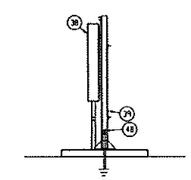

SECTION F-F
(NOT TO SCALE)

NOTES:

1. FOR MINIMUM ELECTRICAL DESIGN CLEARANCES, SEE DWG. E6809-48.
2. OVERHEAD TRANSMISSION CONSTRUCTION (OTC) WILL SUPPLY CONDUCTORS AND ALL HARDWARE NECESSARY TO TERMINATE LINES AND SHIELD WIRES AT THE FIRST STATION STEEL, LEAVING A CONNECTION POINT TO CONNECT THE STATION CONDUCTOR AS SHOWN ON ELEVATIONS. IF FIRST STATION STEEL IS THE FIRST STRUCTURE ON THE STATION OR SUBSTATION THAT IS ORDERED AND INSTALLED BY STATION ENGINEERING.
3. FIELD TO MOUNT SAFETY SWITCH ENCLOSURE WITH UNISTRUT AS REQUIRED. COLD GALVANIZE ANY FIELD DRILLED HOLES USING ZRC COLD GALVANIZING COMPOUND PER MANUFACTURER'S SPECIFICATIONS.

DRAWING NO.	REFERENCE DRAWINGS
27, SH.1	ELEC & STR LAYOUT - 138KV PLAN VIEW
32, SH.1	LIGHT & CONTROL CONDUIT LAYOUT 138KV YARD PLAN VIEW

REV	DATE	DESCRIPTION	BY	APP	REV	DATE	DESCRIPTION	BY	APP	REV	DATE	DESCRIPTION	BY	APP

		DATE
DR.	J. POREMBA/PEI	XX/XX/15
CK.	B. DUTKIEWICZ/PEI	XX/XX/15
APP.	SECTION HEAD	
APP.	DIVISION HEAD	
APP.	XXX/PEI DEPARTMENT HEAD	XX/XX/15

ELEC & STR LAYOUT - 138KV
MISCELANEOUS SECTIONS
AND DETAILS

VAN TYLE — SUBSTATION

SCALE	DRAWING NO.	SHEET	REV.
1/8" = 1'-0"	8645-G27	5	-
JOB XXX			

POL 8645T-1

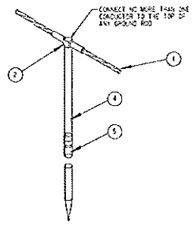

DETAIL #5
TYPICAL GROUND ROD EXTHERMIC CONNECTION

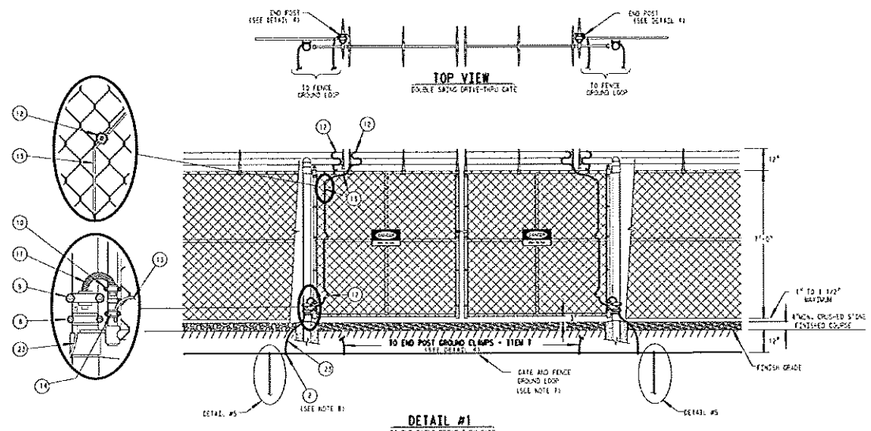

DETAIL #1
DOUBLE SWING DRIVE-THRU GATE (SEE NOTE 6)

ITEM	PART #	DESCRIPTION
1	710-0011	1/0 AWG, 7-STRAND SOFT DRAWN, BARE COPPER CONDUCTOR
2	319-0005	EXOTHERMIC WELD, 90 GRAM CARTRIDGE
3		
4	240-0635	5/8" DIAMETER X 8' LONG COPPERWELD GROUND ROD (SEE NOTE 3).
5	240-0655	GROUND ROD COUPLER (SEE NOTE 3)
6	721-N131	GROUND CLAMP FOR 2 1/2" FENCE POST, #6-#2/0 CONDUCTOR
7	721-N132	GROUND CLAMP FOR 3" FENCE POST, #6-#2/0 CONDUCTOR
8	721-N133	GROUND CLAMP FOR 4" GATE POST, #6-#2/0 CONDUCTOR
9	721-N135	GROUND CLAMP FOR 4" GATE POST, 2" COPPER BRAID
10	721-N134	GROUND CLAMP FOR 2" GATE POST, 2" COPPER BRAID
11	719-N005	COPPER BRAID, 1 1/2"W x 1/8"T WITH 7/8" STUD HOLE, 2 HOLE TERMINALS ON EACH END
12	721-C317	TAP CONNECTOR, SPLIT BOLT TYPE, BRONZE, BURNDY #625
13	719-N004	GROUND WIRE, STEEL, 0.3125" DIA., 7-STRD
14	721-N130	GROUND CLAMP FOR 2" GATE POST, #6-#2/0 CONDUCTOR
15	241-N120	5/8" x 4" EYEBOLT, GRAINGER #2E606
16	241-N121	5/8" x 3" EYEBOLT, GRAINGER #2E604
17	232-N001	5/8" CLEVIS W/ THIMBLE #31, GRAINGER #4K430
18	561-N001	5/8" STEEL CABLE, 20', GRAINGER #4K426
19	231-0192	3/8" x .125" T-BOLT CABLE STRAP, SS
20		UV RESISTANT CABLE TIES
21	713-N008	1/0 FLEXIBLE BONDING CABLE, 20', GRAINGER #3K283
22	231-0323	SEAL, CABLE STRAPING 3/4", SS
23	721-0149	GROUND WIRE, COPPERWELD, #4, 10363
24	721-N095	GROUND CLAMP FOR 1-1/4" FENCE TOP RAIL, 2 SOL TO 250 MCM

NOTES:

1. CONNECTED TO CONFORM TO GROUNDING SPEC, ENGINEERING REPORT E-84-CE AND CONSTRUCTION SPEC, SECTION 16300.
2. WELD THE GROUND RODS TO RODS WITH THE CADWELL PROCESS. CONNECT GROUND RODS TOGETHER USING THE GROUND ROD COUPLERS (ITEM 5).
3. REFER TO SPECIFIC SITE GROUNDING GRAPHIC FOR OVERALL LENGTH OF GROUND RODS 10' OR 15' TYPICALLY.
4. FIELD TO VERIFY: FIELD SUPERVISOR BEFORE DRIVING POST GROUND ROD.
5. AT ALL GROUND CONNECTIONS TO FENCE POSTS, FENCE FABRIC, AND BARBED WIRE, CLEAN AND PROPERLY PREPARE ALL SURFACES, AND APPLY NO-OX GREASE.
6. MAKE ALL GROUND CONNECTIONS TO FENCE FABRIC: FENCE POST AND GATE POST ON THE INSIDE OF FENCE.
7. SEE SUBSTATION PROJECT DRAWINGS FOR PERIMETER FENCE GROUND LOOP WIRE SIZE AND LOCATIONS FOR FENCE GROUND RISERS. PERIMETER FENCE GROUND LOOP IS ASSUMED TO BE #1/0 CU UNLESS OTHERWISE SPECIFIED.
8. CADWELD #1/0 CU (EQUAL TO THE COPPERWELD ITEM) RISER USING STA PRIMOID MOLD #CP- STA #319-0005, 90 GRAM PORCELAIN METAL CARTRIDGE.
9. SEE CONSTRUCTION SPEC, SECTION 02830 FOR CHAIN LINK FENCE INSTALLATION DETAILS.
10. STANDARD INSTALLATION SHALL BE AS SHOWN; DEVIATIONS ARE TO BE INDICATED ON PROJECT DRAWINGS.

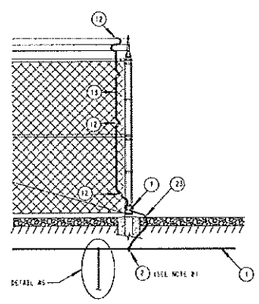

DETAIL #4
END POST (SEE NOTE 6)

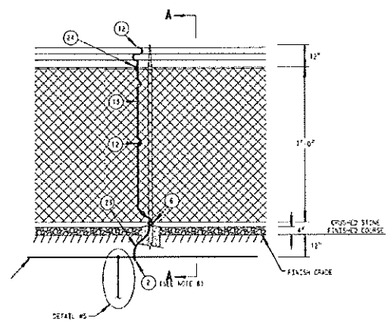

DETAIL #2
LINE POST (SEE NOTE 6)

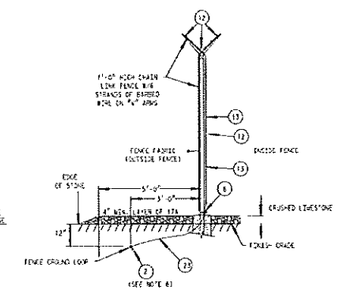

SECTION VIEW "A-A"

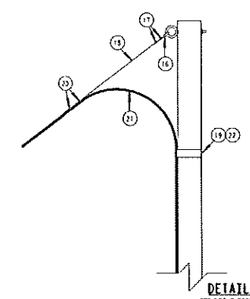

DETAIL #7
GROUNDING POST DETAIL

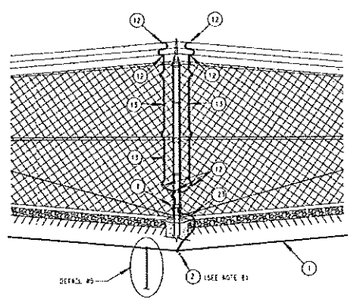

DETAIL #3
CORNER POST (SEE NOTE 6)

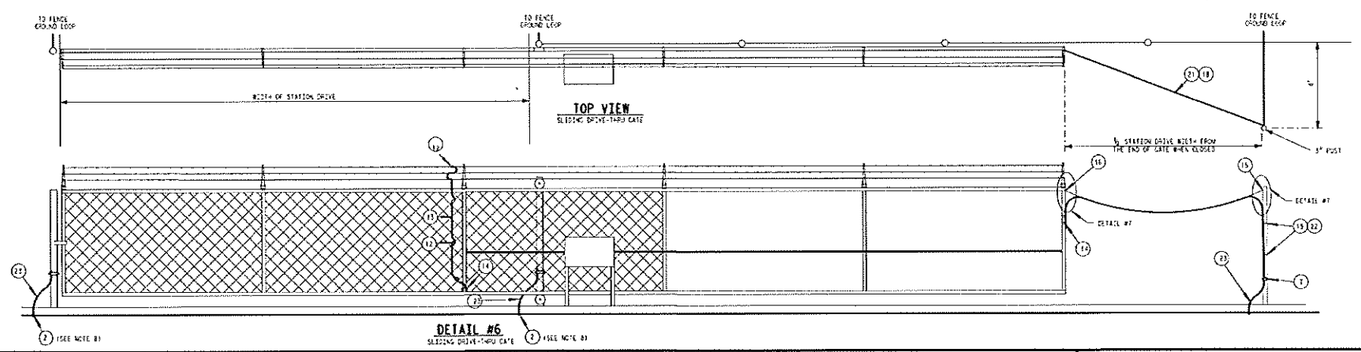

DETAIL #6
SLIDING DRIVE-THRU GATE

STATION STANDARD
5E6000-84
LATEST REVISION "D"

D	PROJ DESIGN	PROJ MANAGER	OTHERS
DATE			

REVISED FENCE HEIGHT TO 7' FABRIC, 8' OVERALL.
ADDED NOTES 9 & 10.

REV/WD

MADE BY	DATE	ACT	RELAY
S. COX	09-18-12		
CHK BY	DATE	EP&PM	APVD FOR ISSUE
			S. COX

C	PROJ DESIGN	PROJ MANAGER	OTHERS
DATE			

REVISED ITEM 12 PN (WAS 721-0334).
CORRECTED ITEM 13 DESCRIPTION (M.Y.

REV/WD

MADE BY	DATE	ACT	RELAY
S.VANG	01-13-12		
CHK BY	DATE	EP&PM	APVD FOR ISSUE
S.WATROS	01-13-12		S.COX

B	PROJ DESIGN	PROJ MANAGER	OTHERS
DATE			

GENERAL REVISION TO CHANGE GROUND RISERS TO COPPERWELD AND FENCE GROUND WIRE TO STEEL.
REVISED ITEM 13 (WAS 710-0073)
AND ADDED ITEMS 23 & 24.
DELETED ITEMS 1A & 3.

REV/WD

MADE BY	DATE	ACT	RELAY
MR	09-12-07		
CHK BY	DATE	EP&PM	APVD FOR ISSUE
MAT	09-12-07		M.W.TRIPP

A	PROJ DESIGN	PROJ MANAGER	OTHERS
DATE			

ADDED GROUNDING DETAILS FOR SLIDE DRIVE-THRU GATE

REV/WD

MADE BY	DATE	ACT	RELAY
F.S.	10-25-05		
CHK BY	DATE	EP&PM	APVD FOR ISSUE
S.W.	10-25-05		M.W.TRIPP

APPROVALS

	OTHER	DATE
PROJECT MANAGER		
RELAY		
EP&PM		
ACT		
OTHERS		

ENGINEERING	
MADE BY	DATE
CDO/BAV	–
LAYOUT BY	DATE
CLN/BAV	–
CHECKED BY	DATE
PROJECT DESIGN/ELECT	DATE
PROJECT DESIGN/ACT	DATE
APPROVED FOR ISSUE	DATE
S.WATROS	8-18-00

TITLE

FENCE GROUNDING DETAILS

LOCATION NAME	SERVICE CENTER	SCALE
STATION STANDARD	–	NONE
DRAWING NUMBER	REQUEST FOR WORK/WO	PROJECT DOCUMENT LIST
5E6000-84	–	–

Signature
dd-mm-yyyy Name: /Username

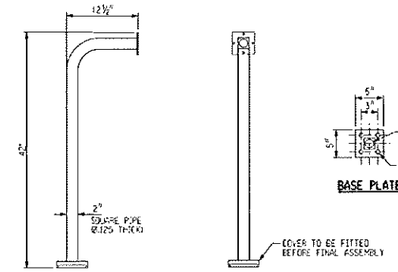

DETAIL 1
SCALE: 1"=1'-0"
(DIMENSIONS ARE APPROXIMATE)

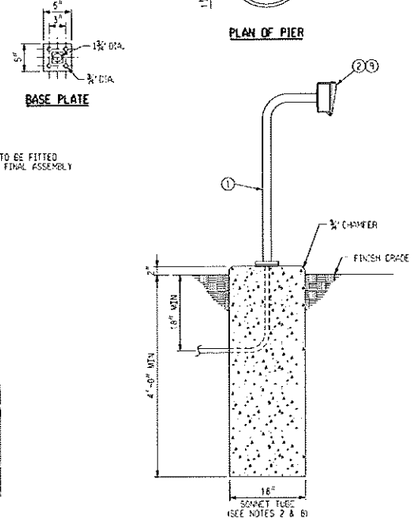

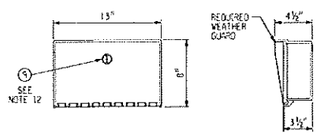

DETAIL 2
SCALE: 1½"=1'-0"
(DIMENSIONS ARE APPROXIMATE)

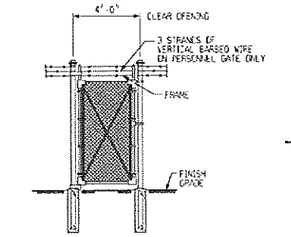

SECTION 'B-B'
SCALE: ½"=1'-0"

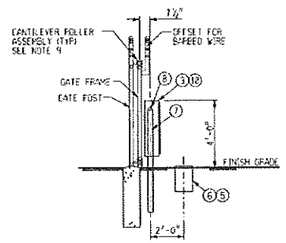

SECTION 'C-C'
SCALE: ½"=1'-0"

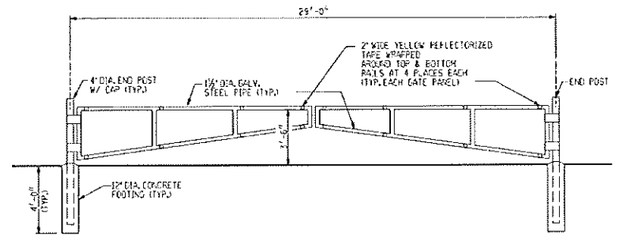

SECTION 'E-E'
SCALE: ½"=1'-0"

ITEM	QUAN	UNIT	DESCRIPTION	REMARKS
1	2	EA	GOOSENECK PEDESTAL, HEAVY GAUGE STEEL TUBING, RUST RESISTANT POWDER COATING, BLACK, THE HOUSTAG COLLEC #PS242 OR EQUIVALENT (SEE DETAIL #1)	BY CONTRACTOR
2	2	EA	HOUSING, POLYCARBONATE (R3-UV STABILIZED, THE HOUSING COLLEC #PC-H241 OR EQUIVALENT (SEE DETAIL #2)	BY CONTRACTOR
3	1	EA	SLIDE GATE OPERATOR W/ COLD WEATHER PACKAGE, #40 CHAIN, LINEAR CORP. #HSLG-113 OHP, 115VAC, SINGLE PHASE)	BY CONTRACTOR
4	8	EA	ANCHOR BOLT, RIGHT ANGLE BEND, ¾" DIAMETER, 12" LENGTH, ASTM 1554 GRADE 36, HOT DIP GALVANIZE ASTM A153, PORTLAND BOLT #12615 OR EQUIVALENT (SEE NOTE 12)	BY CONTRACTOR
5	1	EA	HANDHOLE, 13" X 24" X 18", HIGH DENSITY POLYMER CONCRETE, SYNERTECH #S132481B-A OR EQUIVALENT.	#739K037
6	1	EA	LID, HANDHOLE, 13" X 24", SYNERTECH S132481B2A22	#739K038
7	16	FT	3½" OD RIGID PIPE, SCH 40	BY CONTRACTOR
8	2	EA	3½" STEEL CAP	BY CONTRACTOR
9	2	EA	KEY SWITCH, 32VDC, STANLEY #W78L626 OR EQUIVALENT	BY CONTRACTOR
12	1	EA	115VAC HEATER WITH CASE, SUPPLIED WITH LINEAR GATE OPERATOR	BY CONTRACTOR

MATERIAL LIST FOR TWO ACCESS PEDESTALS, ONE MOTORIZED GATE

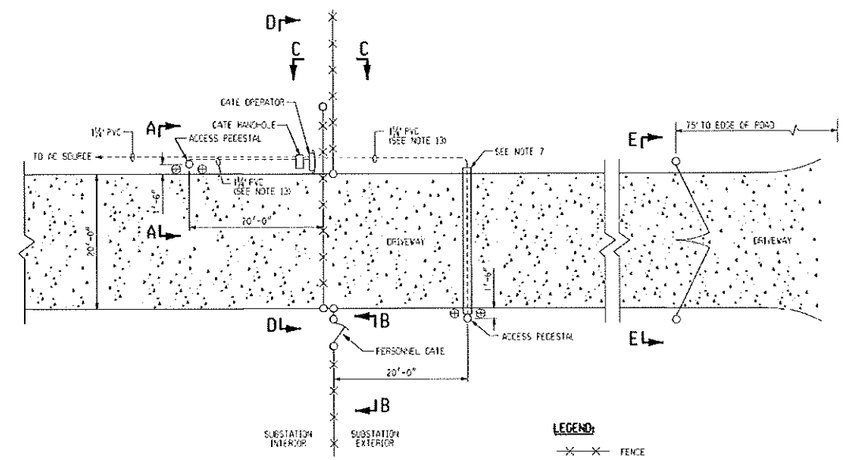

SUBSTATION ACCESS PLAN VIEW
TYPICAL INSTALLATION
SCALE: 1"=10'-0"

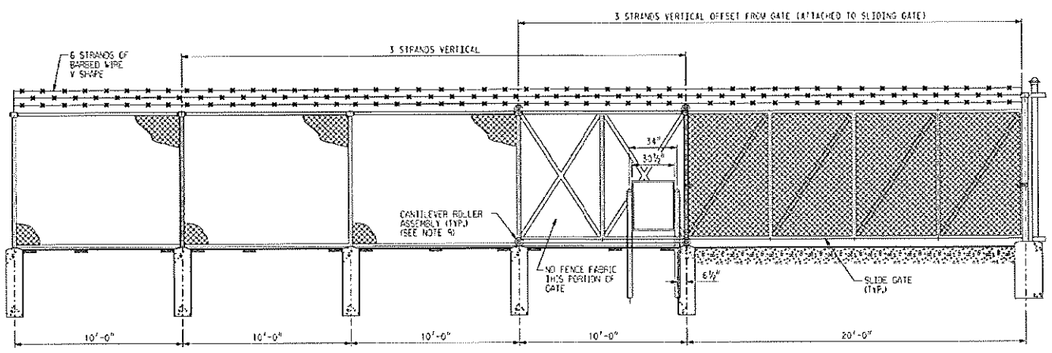

SECTION 'D-D'
SCALE: ½"=1'-0"

LEGEND:

—X—X— FENCE

⊕ BOLLARD

NOTES:

1. FOR FENCE GROUNDING DETAILS, SEE STANDARD 5E6000-84.
2. FOR GENERAL NOTES AND CONCRETE SPECIFICATIONS, SEE 5SE6000-3 REV "G" OR LATER.
3. SEE FENCE SPECIFICATION SECTION 02830 FOR CHAIN LINK FENCE INSTALLATION DETAILS.
4. SEE BELOW GRADE CONDUIT SPECIFICATION 16115, FOR CONDUIT INSTALLATION DETAILS.
5. SEE MANUFACTURER INSTALLATION GUIDE FOR DETAILED INSTALLATION INSTRUCTIONS ON GATE OPERATOR.
6. STANDARD INSTALLATION WILL BE AS SHOWN. DERIVATIONS ARE TO BE INDICATED ON THE PROJECT DRAWINGS.
7. DUCT SHALL BE ENCASED IN CONCRETE WITH AT LEAST THREE (3) INCHES OF CONCRETE AT THE TOP, BOTTOM AND SIDES. TOP OF CONCRETE SHOULD BE 30" MIN FROM FINISH GRADE. USE 5 BAG CONCRETE MIX AT 3000 PSI. EXTEND 3000 PSI ENCASEMENT 5' ON EITHER SIDE OF DRIVE UNLESS OTHERWISE NOTED.
8. TOTAL VOLUME OF CONCRETE IS APPROXIMATELY 0.55 CU YDS FOR QTY 2 PEDESTALS.
9. INSTALL SAFETY GUARDS ON ALL CANTILEVER ROLLER ASSEMBLIES.
10. CONTRACTOR SHALL SUPPLY 1 GALVANIZED ASTM A563A HEX NUT AND 1 GALVANIZED ASTM F436 STD. WASHER PER ANCHOR BOLT.
11. IF A PHYSICAL SECURITY SYSTEM IS REQUIRED FOR SUBSTATION SITE, CONTACT ITC SECURITY FOR BADGE READER REQUIREMENTS. BACK UP KEY SWITCHES MAY BE REQUIRED NEAR GATE MOTOR
12. REPLACE STANDARD LOCKING MECHANISM WITH KEY SWITCH. LOCKING CORE SHALL BE COMPATIBLE WITH BEST BRAND KEY CORES.
13. RUN 2/C #12 CONTROL CABLE AND BARE ⅙ CU FOR GND IN CONDUIT BETWEEN GATE OPERATOR AND PEDESTAL.

STATION STANDARD
5E6000-88
LATEST REVISION -

PROJ DESIGN	PROJ MANAGER	OTHERS
DATE		

REVIEWED

MADE BY	DATE	ACT	RELEAY
CHK BY	DATE	EPMM	APVD FOR ISSUE

PROJ DESIGN	PROJ MANAGER	OTHERS
DATE		

REVIEWED

MADE BY	DATE	ACT	RELEAY
CHK BY	DATE	EPMM	APVD FOR ISSUE

PROJ DESIGN	PROJ MANAGER	OTHERS
DATE		

REVIEWED

MADE BY	DATE	ACT	RELEAY
CHK BY	DATE	EPMM	APVD FOR ISSUE

APPROVALS

	OTHER	DATE
PROJECT MANAGER		
RELAY		
EPMM		
ACT		
OTHERS		

ENGINEERING	
MADE BY	DATE
S. COX	05/21/13
LAYOUT BY	DATE
S. WANG	05/22/13
CHECKED BY	DATE
R. ESCOTT	05/22/13
PROJECT DESIGN ENGINEER	DATE
PROJECT DESIGN MGR	DATE
T. EDWARDS	05/24/13
APPROVED FOR ISSUE	DATE
S. COX	05/23/13

TITLE
SUBSTATION ACCESS INSTALLAION & FENCE GATE DETAILS

LOCATION NAME	SERVICE CENTER	SCALE
STATION STANDARD	-	AS SHOWN
DRAWING NUMBER: 5E6000-88	REQUEST FOR WORK/WO: -	PROJECT DOCUMENT LIST: -

Signature
Date/Time /User name

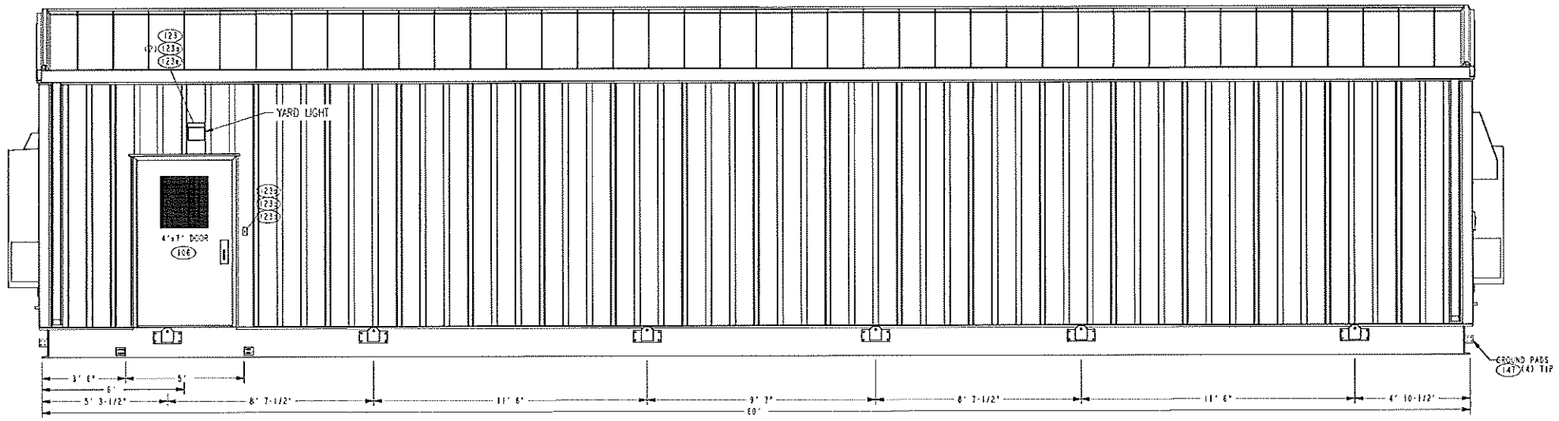

WALL A

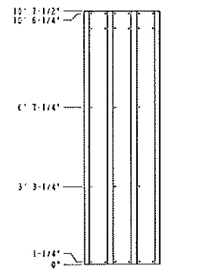

SHEETING SCREW LOCATION
MULTI-RIB STANDARD WALL

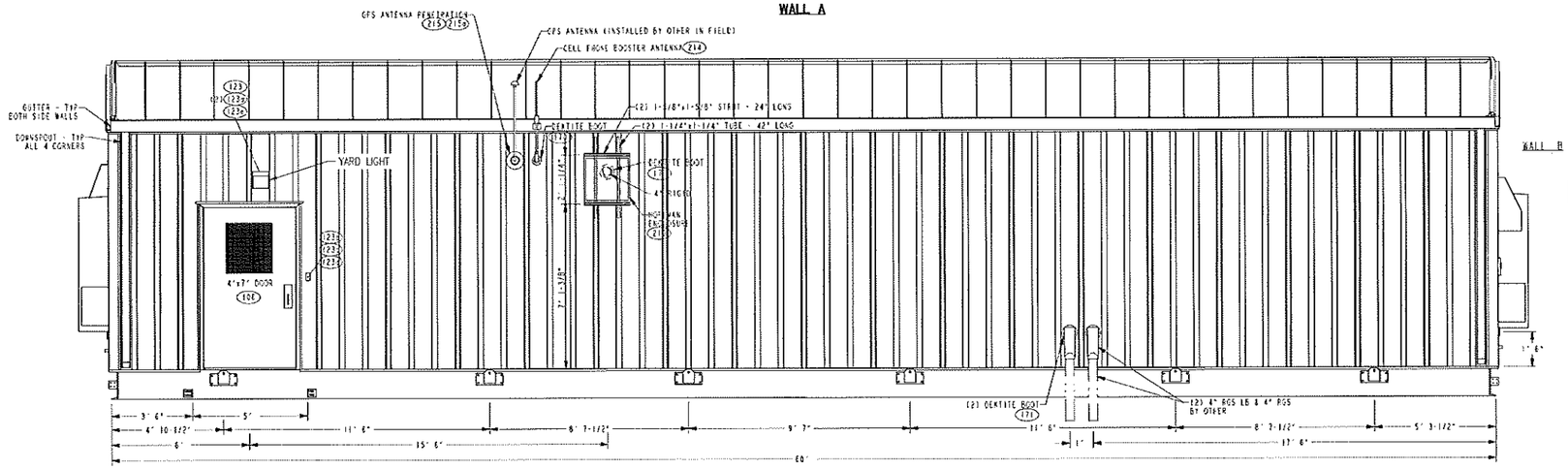

WALL C

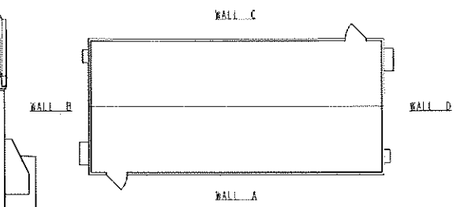

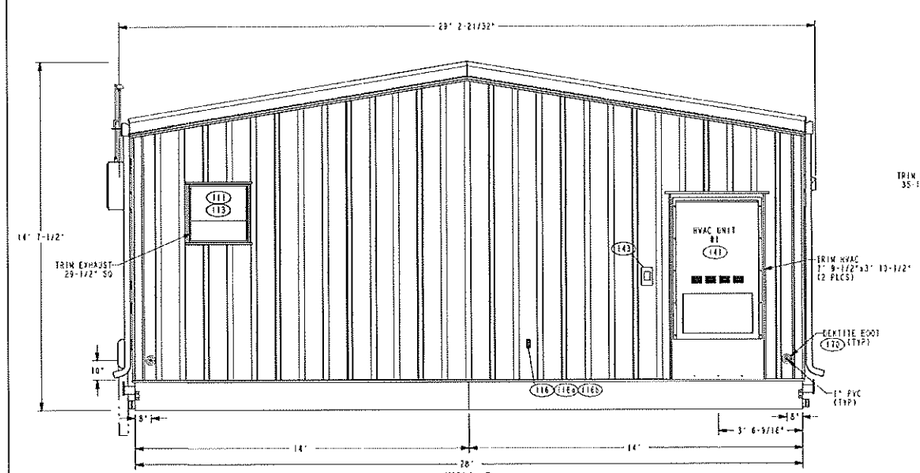

WALL B

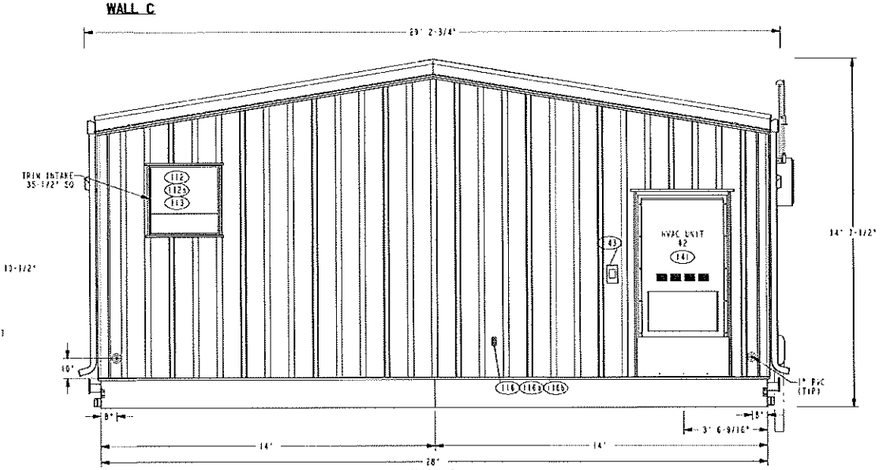

WALL D

REVISION	
DFTM:	DATE:
CHK'D:	DATE:
APP'D:	DATE:
REVISION	
DFTM:	DATE:
CHK'D:	DATE:
APP'D:	DATE:
REVISION	
DFTM:	DATE:
CHK'D:	DATE:
APP'D:	DATE:
REVISION	0

TOLERANCE NOTE C

UNLESS SPECIFIED OTHERWISE
WHOLE NUMBERS +/- 1/16"
FRACTIONS +/- 1/32"
HOLE DIAMETERS +/- 1/64"
ANGLES +/- 1°
WELD LENGTH +/- 1/4"
WELD SPACING +/- 1"

SYSTEMS CONTROL
A DIVISION OF NORTHERN STAR INDUSTRIES, INC.
IRON MOUNTAIN, MICHIGAN

DFTM. RC	DATE: 9/8/15	WOLVERINE VAN ETTE SUBSTATION
CHK'D. CREO	DATE: 9/9/15	
APPD. CREO	DATE: 9/9/15	
DIMENSIONS IN INCHES SCALE: N.T.S.		CONTROL HOUSE EXTERIOR ELEVATIONS
SCC PROJECT NUMBER 38559-001		DRAWING NO. 38559-L3

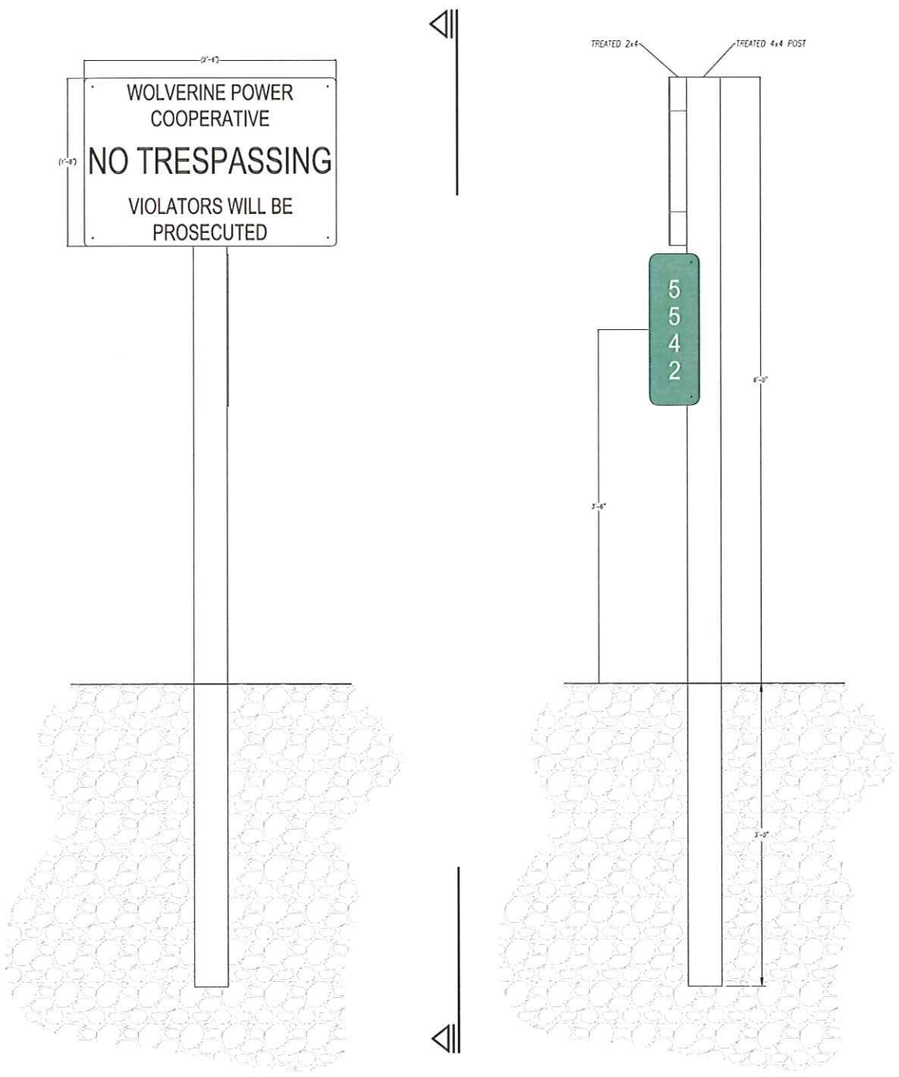

SIGN INSTALLATION DETAIL
SCALE: 1-1/2" = 1'

SIGNS PROVIDED BY WPC
SCALE: HALF

CRITICAL ENERGY INFRASTRUCTURE INFORMATION – DO NOT RELEASE

THIS DOCUMENT IS THE PROPERTY OF WOLVERINE POWER COOPERATIVE (WPC) AND IS INTENDED SOLELY FOR USE BY WPC AND ITS MEMBERS. ANY USE OR DISTRIBUTION OF THIS INFORMATION FOR PURPOSES OTHER THAN THOSE FOR WHICH WPC INTENDED REQUIRES WRITTEN PERMISSION FROM WPC. WHEN USED FOR ANY UNAPPROVED PURPOSE WPC WILL NOT BE RESPONSIBLE FOR THE ACCURACY OR COMPLETENESS OF THIS DOCUMENT.

WOLVERINE POWER COOPERATIVE
10125 W. WATERGATE ROAD, CADILLAC, MI 49601

REV #	DATE	DESCRIPTION
A	09/29/15	INCORPORATE SUBSTATION ADDRESS FOR TOWNSHIP MEETING

VAN TYLE TRANSMISSION
SUBSTATION SIGN DETAILS

CAD DRAWING VTT 991
DRAWN ELB
ENG.
P.M.
SCALE AS NOTED
ORIGINAL 08/18/15
SHEET 991