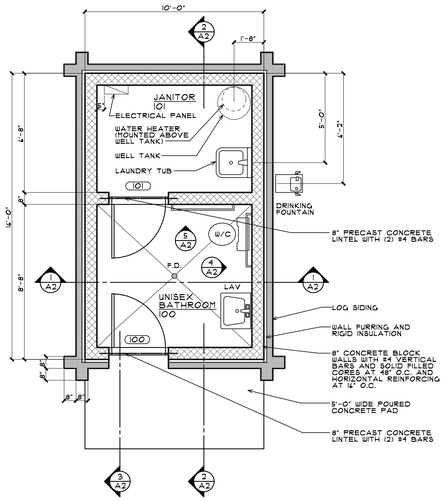

FLOOR PLAN (1/A1)

SCALE: 1/4" = 1'-0"

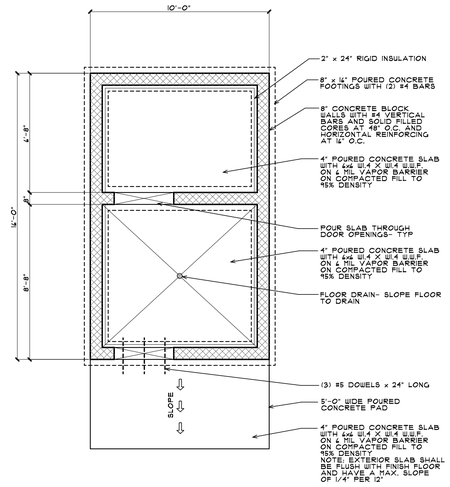

FOUNDATION PLAN (2/A1)

SCALE: 1/4" = 1'-0"

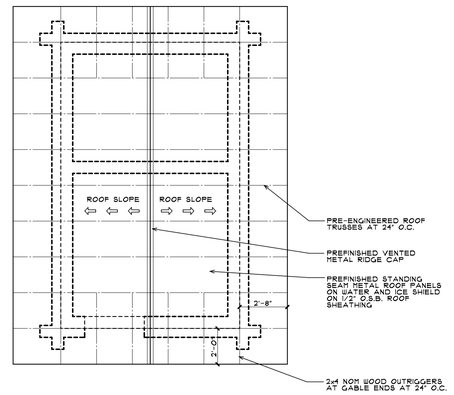

ROOF PLAN (3/A1)

SCALE: 1/4" = 1'-0"

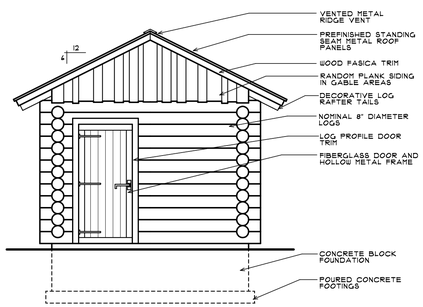

FRONT ELEVATION (4/A1)

SCALE: 1/4" = 1'-0"

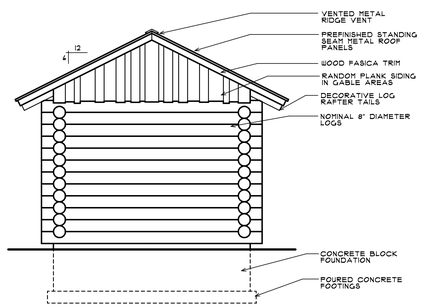

REAR ELEVATION (5/A1)

SCALE: 1/4" = 1'-0"

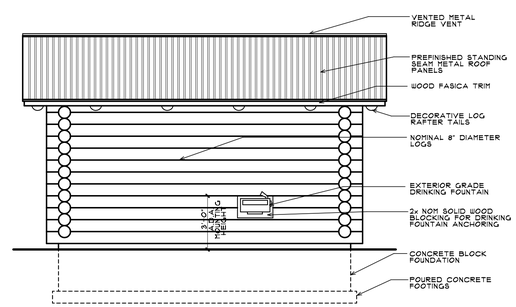

RT. SIDE ELEVATION (6/A1)

SCALE: 1/4" = 1'-0"

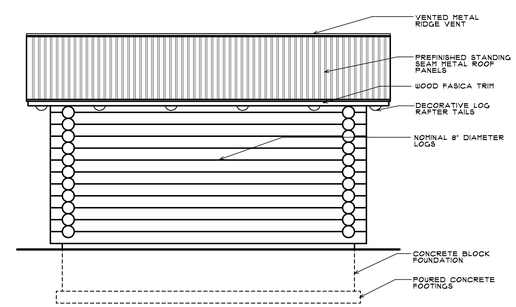

LT. SIDE ELEVATION (7/A1)

SCALE: 1/4" = 1'-0"

ISSUED	DATE

ISSUED	DATE
ZONING REVIEW	2/1/12
BIDDING AND CONSTRUCTION	4/30/12

DRAWN BY	T.L.S.
CHECKED	T.L.S.
APPROVED BY	T.L.S.
DATE	2/3/12
PRINT DATE	

SEIDELL ARCHITECTS
COMMERCIAL RESIDENTIAL INDUSTRIAL
114 N. COURT AVE. STE. 201
POST OFFICE BOX 2189
GAYLORD, MICHIGAN 49734
PHONE (989) 731-0372
FAX (989) 731-6832

PROJECT
LOUIS M. GROEN NATURE PRESERVE
NEW RESTROOM FACILITY
GINGELL ROAD
JOHANNESBURG, MICHIGAN

PROJECT NO.
12-012

SHEET
A1