Otsego County Board of Commissioners
225 West Main Street • Gaylord, Michigan 49735
989-731-7520 • Fax 989-731-7529

NOTICE OF MEETING

The Otsego County Board of Commissioners will hold a regular meeting on Tuesday, July 8, 2008 beginning at 9:30 a.m., in the Multi-Purpose Room of the J. Richard Yuill Alpine Center, Gaylord, Michigan 49735.

AGENDA

1. Call to Order
2. Invocation
3. Pledge of Allegiance
4. Roll Call
5. Approval of Regular Minutes of June 24, 2008 w/attachments
6. Consent Agenda
   - A. OCR 08-19 Discharge of Mortgage - Nawrot - Motion to Adopt
7. Administrator's Report
8. Department Head Reports
   - A. Clerk/ROD Quarterly Update - Suzy DeFeyter
   - B. Building & Grounds Update - Dale Fulcher
9. City Liaison, Township & Village Representatives
10. Correspondence
11. Special Presentations
    - A. Fallen Heroes Memorial Foundation
12. New Business
    - A. Financials
      1. Warrant B2008-27
      2. Warrant B2008-28
    - B. Technology Committee Recommendation
      1. County Website Design
    - C. OCR 08-20 Reaching Out Against Road Rage
13. Public Comment
14. Board Remarks
15. Adjournment

In compliance with the Americans with Disabilities Act, persons with physical limitations that may tend to restrict access to or participation in this meeting should contact the County Administrator's office (989-731-7520) at least twelve (12) hours prior to the scheduled start of the meeting.

June 24, 2008

The Regular meeting of the Otsego County Board of Commissioners was held in the Multi-Purpose Room of the J. Richard Yuill Alpine Center. The meeting was called to order at 9:31 a.m. by Chairman Glasser. Invocation by Chairman Glasser, followed by the Pledge of Allegiance led by Commissioner Bates.

Roll call:
Present: Backenstose, Bates, Beachnau, Liss, Olsen, Glasser, Johnson, Hyde.
Excused: Bentz.

The Regular meeting minutes of June 10, 2008 and the Pre-Board meeting of June 10, 2008 with attachments were approved as presented.

Consent Agenda:
Motion to approve the RSVP Memorandum of Understanding as presented. Motion carried via unanimous consent. (see attached)

Administrator's Report:

John Burt reported on the County Planning Commission; Panic buttons reinstalled; Elevator phone estimate; Wood work on the Courthouse.

Rachel Frisch reported on the goals in the finance department; Budget process to begin.

Kyle T. Legel presented his quarterly report to the Board.

Elizabeth Haus reported on the Village of Vanderbilt.

Special Presentation:
The 2007 audit was presented to the Board.

New Business:

Motion by Commissioner Hyde, to approve Warrant B2008-25 in the amount of $57,226.59 with prepaids in the amount of $66,087.67 as presented. Ayes: Unanimous. Motion carried.

Motion by Commissioner Liss, to approve Warrant B2008-26 in the amount of $193,465.08 as presented. Ayes: Unanimous. Motion carried.

Motion by Commissioner Johnson, to approve the bid from RPM Construction for $37,155.00 for vault toilets to be paid out of the Parks & Recreation Commission Fund (208). Ayes: Unanimous. Motion carried.

A discussion was held regarding the flags and poles on S. Otsego Ave.

Motion by Commissioner Beachnau, to adopt OCR-08-18, approving the FY 2009 Motorcycle Safety Grant in the amount of $6,271.00 as presented.
Roll Call Vote:
Ayes: Backenstose, Bates, Beachnau, Liss, Olsen, Glasser, Johnson, Hyde.
Nays: None.
Excused: Bentz.
Motion carried/Resolution adopted. (see attached)

Motion by Commissioner Olsen, to approve the FY 2008 (General Fund/Motorcycle Safety) budget amendment as presented. Ayes: Unanimous. Motion carried. (see attached)

Attorney Matt Vermetten discussed a road easement.

Motion by Commission Olsen, to have County Attorneys work with M-Bank to get clear title to road access at the Gaylord Motel using language that gives Bagley Township easement on parcel B roadway and to have Otsego County Attorney fees paid for by M-Bank. Ayes: Unanimous. Motion carried.

Board Remarks:

Commissioner Backenstose: Zoning Board of Appeals.

Commissioner Olsen:	Attended I-75 ribbon cutting ceremony. Commended Mike Tarbutton on the County Park.
Commissioner Hyde:	Reported on the Airport; Air Fair.
Commissioner Beachnau:	Attended City-Council meeting. Air Fair.
Chairman Glasser:	LAPC meeting. Storm ready event July 1, 2008 at 1:00 p.m. at the University Center. Media requests.

Maureen Derenzy reported on the library summer reading program.

Mike Tarbutton reported on the waterway grant.

Meeting adjourned at 10:55 a.m at the call of the Chair.

_____

Kenneth R. Glasser Chairman

_____

Susan I. DeFeyter, County Clerk

MEMORANDUM OF UNDERSTANDING

BETWEEN

RETIRED AND SENIOR VOLUNTEER PROGRAM (RSVP) OF OTSEGO COUNTY

AND

Volunteer Station County of Otsego Phone No. (989)731-7520
Address 225 West Main Street, Gaylord, Michigan 49735

It is agreed that the attached Basic Provisions will guide our working relationship and that the following RSVP representatives will serve as liaisons with the volunteer station:

Tammie Rich, RSVP Director. 989-732-8929 E-mail: tammier@verizon.net

Diana Weier, RSVP Program Coordinator. 989-732-6232, ext. 16 E-mail: rsvpdiana@verizon.net

Lisa Smith, RSVP Office Manager & Medical Transport. 989-732-6232 E-mail: rsvplisa@verizon.net

The volunteer station representative who will serve as the liaison with RSVP, and who will be responsible for volunteer orientation and supervision is:

Name Susan Premo Phone No. (989)731-7520

Address 225 West Main Street, Gaylord, Michigan 49735 FAX No. (989)731-7529

e-mail address spremo@otsegocountymi.gov

This Memorandum of Understanding (MOU) may be amended in writing, at any time with the concurrence of both parties. It will be reviewed annually to permit needed changes.

This document is valid June 12, 2008 through June 11, 2011.

By his/her signature, the following volunteer station representative verifies that this organization/agency has the legal status of public or private non-profit.

FOR VOLUNTEER SERVICES

Tammie Rich
RSVP Director

Signature

Date

FOR THE VOLUNTEER STATION

John M. Burt
Printed Name

County Administrator
Title

Signature

June 24, 2008
Date

Copies: ___Volunteer Station ___RSVP file

BASIC PROVISIONS OF THE MEMORANDUM OF UNDERSTANDING

Retired and Senior Volunteer Program (RSVP)

Volunteer Services will:

- Recruit, interview, and enroll volunteers and refer volunteers to the volunteer stations.
- Provide orientation to the volunteer station staff prior to placement of volunteers and at other times, as the need arises.
- Review acceptability of volunteer assignments.
- Furnish supplementary accident, personal liability, and automobile liability insurance coverage as required by federal policy while the volunteer is traveling to and from the work station and during the volunteer activity. This insurance provides supplementary coverage only; it is not primary insurance.
- In cooperation with the sponsoring agency (Otsego County United Way), provide an appeals procedure to address problems arising between a volunteer, the volunteer station, and/or RSVP.
- Provide or arrange with volunteer stations for transportation of volunteers to and from their work assignments, when possible, if the volunteer does not have his/her own transportation.
- Arrange with the volunteer station, when possible, for a meal if volunteers are on assignment over a meal time.
- Monitor volunteer activities at the volunteer stations periodically to assess and/or discuss needs of the volunteers and the volunteer stations, and
- May conduct basic background checks on potential volunteers.

The volunteer station will:

- Be responsible for interviewing, screening, and making the final decision on accepting the assignment of a volunteer.
- Discuss assignments with individual volunteers referred by RSVP and provide a written job description to each volunteer with a copy to RSVP.
- Implement appropriate orientation, in-service instruction, or special training of volunteers.
- Furnish volunteers with any materials or other items as well as transportation required during the work assignment.
- Provide for adequate safety of volunteers.
- Provide other basic workplace information to the volunteers.
- Validate the volunteer sign-in sheet and any other report or documentation that may be necessary for the volunteer.
- Investigate and report to RSVP any accident/injury involving a volunteer.
- Provide adequate supervision of volunteers on assignments.
- Supply financial vouchers to RSVP to verify non-federal support when lunches or transportation have been provided to volunteers during their work assignments.
- Cooperate in assessing handicap accessibility of the volunteer station, and make reasonable attempts to enable disabled persons access to the facilities and events.
- Not refer volunteers to any assignments which would displace employed workers or impair existing contracts for service.
- Comply with provisions of Title VI of the Civil Rights Act of 1964.
- Specify, either by written information or verbally, that RSVP volunteers are participants in the volunteer station's program in all publicity featuring volunteers.

Other Provisions:

Separation from Volunteer Service. The volunteer station may request the removal of a volunteer at any time. Likewise, the volunteer may withdraw from service at the volunteer station or from RSVP at any time. Discussions of individual separations will occur between RSVP staff, volunteer station staff, and the volunteer in order to clarify the reason(s) for the separation; to resolve conflicts; or to take remedial action which may include placement with another volunteer station if possible.

Organization/Agency Release. The volunteer station understands and agrees that the volunteers referred to its organization/agency by RSVP are provided only as candidates for review and consideration by the organization/agency. The organization/agency voluntarily assumes all risks incident to acceptance of potential volunteers, and releases and discharges the referring agency from any claim, liability, or demand of any kind or cause which may arise as a result of the actions or failure to act of any prospective volunteer referred to the organization/agency.

Special Provisions. (For additional provisions specific to the work station.)

_____
_____
_____
_____
_____

THIS MEMORANDUM OF UNDERSTANDING WILL BE IN EFFECT UPON THE DATED SIGNATURE OF THE ORGANIZATION/AGENCY OFFICIAL AND THE RSVP DIRECTOR.

RESOLUTION NO. OCR 08-18
AUTHORIZING RESOLUTION
OTSEGO COUNTY BOARD OF COMMISSIONERS
JUNE 24, 2008

SUBMISSION OF MOTORCYCLE SAFETY GRANT

WHEREAS, the Otsego County Board of Commissioners wishes to apply to the State of Michigan through the Department of Management and Budget, Motorcycle Safety Program Grant; and

WHEREAS, the Otsego County Board of Commissioners has chosen to submit a grant application for the purchase of one (1) Yamaha TW200 at $3,411 each and one (1) Suzuki GZ250 at $2,860 each training motorcycles, grant total of $6,271 in 2008; now, therefore, be it

RESOLVED, that Marlene K. Hopp, the Otsego County Grant Administrator, Rachel Frisch, Otsego County Finance Director and Tim McPherson, Program Coordinator be authorized to sign and submit grant documents.

OTSEGO COUNTY
BUDGET AMENDMENT

FUND/DEPARTMENT: General Fund / Motorcycle Sfty

As provided for in the Uniform Budget and Accounting Act of 1978, as amended, and consistent with Otsego County Policy, the Administrator and Finance Director are hereby authorized to record the following adjustments to the budget.

Fund Type: ☒ General ☐ Special Revenue ☐ Debt Service ☐ Capital Project ☐ Business-Type (Enterprise or Internal Svc)

REVENUE To account for State Grant to purchase new motorcycles.

Account Number	Decrease	Increase
1010332-539000 -BIKE	$	$ 6,271
- -	$	$
- -	$	$
- -	$	$
Total	$	$ 6,271

EXPENDITURE

Account Number	Increase	Decrease
101E332-970420 -BIKE	$ 6,271	$
- -	$	$
- -	$	$
- -	$	$
- -	$	$
- -	$	$
Total	$ 6,271	$

Rachel Frisch
Department Head Signature

6-20-08
Date

Finance Department
Entered:
By:

Administrator's Signature

6-20-08
Date

Board Approval Date (if necessary)

Budget Adjustment #

Posting Number

OCF-3 (10/14/05)

Otsego COUNTY

ESTABLISHED 1875 MICHIGAN

July 8, 2008
Agenda

RESOLUTION NO. OCR 08-19
AUTHORIZING RESOLUTION

OTSEGO COUNTY BOARD OF COMMISSIONERS
July 8, 2008

WHEREAS, the Otsego County Board of Commissioners is the owner of a property located at 4705 West Otsego Lake Dr; and has a mortgage recorded in the office of the Register of Deeds for Otsego County Michigan, in Liber 472, Page 840, re-recorded for corrections, in Liber 524, Page 216, and Liber 525, Page 543, in the name Mary Jo Nawrot, a single woman and

WHEREAS, said Mortgage has been paid in full; now, therefore, be it

RESOLVED, that Otsego County hereby issues a DISCHARGE OF MORTGAGE to, Mary Jo Nawrot, a single woman and be it further

RESOLVED, that the Otsego County Administrator, on behalf of the Otsego County Board of Commissioners, be authorized to sign said document.

OTSEGO COUNTY CLERK/REGISTER OF DEEDS

TRANSMITTAL

3/1/2008 - 6/30/2008

ACCOUNT NUMBER	ACCOUNT NAME	SUBACCOUNT NAME	AMOUNT
March 2008			
0701L-228040	REMONUMENTATION - STATE		$2383.70
0701L-228044	STATE TRANSFER TAX		$31353.75
0701L-228050	REMONUMENTATION - COUNTY		$36.30
1010215-607200	COUNTY TRANSFER TAX		$5068.80
1010215-607210	RECORDING FEES		$9623.00
1010215-626030	COPIES & CERT. SEARCHES		$4318.25
1010215-694000	OVER/SHORT		$154.00
2560170-607210	TECHNOLOGY FUND		$3455.00
		March 2008 Subtotal:	**$56392.80**
April 2008			
0701L-228040	REMONUMENTATION - STATE		$2170.94
0701L-228044	STATE TRANSFER TAX		$40957.50
0701L-228050	REMONUMENTATION - COUNTY		$33.06
1010215-607200	COUNTY TRANSFER TAX		$7596.05
1010215-607210	RECORDING FEES		$14887.00
1010215-626030	COPIES & CERT. SEARCHES		$3820.15
1010215-694000	OVER/SHORT		$169.00
2560170-607210	TECHNOLOGY FUND		$5340.00
		April 2008 Subtotal:	**$74973.70**
May 2008			
0701L-228040	REMONUMENTATION - STATE		$2044.86
0701L-228044	STATE TRANSFER TAX		$28792.50
0701L-228050	REMONUMENTATION - COUNTY		$31.14
1010215-607200	COUNTY TRANSFER TAX		$5947.70
1010215-607210	RECORDING FEES		$7908.00
1010215-626030	COPIES & CERT. SEARCHES		$3316.05
1010215-694000	OVER/SHORT		$40.00
2560170-607210	TECHNOLOGY FUND		$2810.00
		May 2008 Subtotal:	**$50890.25**
June 2008			
0701L-228040	REMONUMENTATION - STATE		$2218.22
0701L-228044	STATE TRANSFER TAX		$28773.75
0701L-228050	REMONUMENTATION - COUNTY		$33.78
1010215-607200	COUNTY TRANSFER TAX		$4679.95
1010215-607210	RECORDING FEES		$9030.00
1010215-626030	COPIES & CERT. SEARCHES		$3291.30
1010215-694000	OVER/SHORT		$103.00
2560170-607210	TECHNOLOGY FUND		$3195.00
		June 2008 Subtotal:	**$51325.00**

GRAND TOTAL: $233581.75

OTSEGO COUNTY CLERK/REGISTER OF DEEDS

GENERAL RECEIPT SUMMARY

12:00 AM 3/1/2008 - 11:59 PM 6/30/2008

ITEM CODE	ITEM DESCRIPTION	QTY	AMOUNT
CERT	CERTIFICATION	27	27.00
COPIES	COPIES	6806	6806.00
DEED	DEED	560	8953.00
DEED.C	REDEEM/FORFEITURE	574	5743.00
DEED.SH	SHERIFF'S DEED	37	1133.00
FIX	FIXTURE FILING	10	150.00
LC	LAND CONTRACT	17	397.00
LCRC	LAND CORNER	2	28.00
LIEN	LIEN	59	862.00
LIEN.MES	MESC LIEN	47	96.00
LIEN.R	RELEASE TAX LIEN	30	235.00
LIEN.SF	STATE/FED LIEN	61	650.00
MISC CR	CREDT DOCS	3	60.00
MISC REC	MISCELLANEOUS RECORD	398	7798.00
MORT	MORTGAGE	502	23456.00
MORT.A	MORTGAGE ASSIGNMENT	50	796.00
MORT.D	MORTGAGE DISCHARGE	489	7002.00
MORT.LP	ASSN/DISCH EXTRA L/P	22	330.00
OG	OIL & GAS	121	2981.00
OG.A	O/G ASSN EXTRA PAGES	18	4530.00
OVERPAY	OVER/SHORT	38	466.00
RCORNER	REMON CORNER	0	0.00
SEARCH	SEARCH	41	7912.75
TTAX	TRANSFER TAX	209	148926.20
TTAX EX	TRANSFER TAX EXEMPT	31	4243.80
	TOTAL	**10152**	**$233581.75**

Cash In	**$3192.12**
Cash Out	**$542.40**
Total Cash	**$2649.72**
Checks	**$224574.03**
Charges	**$6358.00**
Escrow	**$0.00**
Total Receipts	**$233581.75**

Otsego COUNTY
ESTABLISHED 1875 MICHIGAN

PRESENTATION REQUEST FOR BOARD OF COMMISSIONERS MEETINGS

ORGANIZATION/AGENCY FALLEN HEROES MEMORIAL FOUNDATION

PRESENTER SKIP BUSHART TITLE PRESIDENT

ADDRESS 711 REYNOLDS DR. WATERFORD, MI 48328

MEETING DATE JULY 8 2008 TIME 9:30 AM.

PURPOSE REQUEST LOCATION SITE FOR PLACING A MEMORIAL HONORING THOSE WHO HAVE SERVED IN OPERATION IRAQI FREEDOM AND OPERATION ENDURING FREEDOM AND PFC JOHN BISHOP

TYPE OF PRESENTATION ORAL

EQUIPMENT REQUIRED NONE

APPROXIMATE LENGTH 3-5 MINUTES

MATERIAL TO DISTRIBUTE* PAMPHELTS AND BLUEPRINTS

*Please have material to distribute available for the Commissioners at the County Administrator's office the Thursday prior to the meeting.

EXPECTED DECISION BY THE COMMISSION APPROVAL OF SITE LOCATION

OTHER INTERESTED INDIVIDUALS TO BE PRESENT:

NAME JOHN BISHOP TITLE FATHER, PFC JOHN BISHOP

NAME GAYE BISHOP TITLE MOTHER, PFC JOHN BISHOP

NAME _____ TITLE _____

NAME _____ TITLE _____

DATE OF REQUEST JUNE 30, 2008

SIGNATURE Skip Bushart

COMMITTEE REFERRAL _____

Return completed form to: Otsego County Administrator
225 West Main Street, Room 203
Gaylord, MI 49735
Fax#(989)731-7529

EXPRESSIONS

"We are so grateful for the memorial for the three men from Fowlerville, including our son Major Gerald Bloomfield II, who gave their lives in the hopes of protecting us from terrorists and people who hate our way of life. They have died so young. The memorial is a great reminder of who they were and in its way keeps them alive. Thank you again."

Shirley and Ronald Spears, Howell, MI

"I couldn't make it the day that it was unveiled, but I have been there several times. It is very beautiful and I am so grateful that my son's name is there and he will be remembered. I've seen several people come and look at it and touch it and even a few cry. These three men were THE FEW. THE PROUD. MARINES. I think about my son a few hundred times a day. Thank you for keeping his memory alive."

Karen Hanks, Fowlerville, MI

"The memorial is a wonderful way to express our gratitude and love to our fallen hero. Damian's memorial is beautiful and stands within walking distance from his gravesite. It almost looks like it is standing guard over our fallen hero. I know I can say that Damian is looking down on us from heaven above with that crooked smile of his saying, 'Way to go and thanks.'"

Patricia McLatcher, Waterford, MI

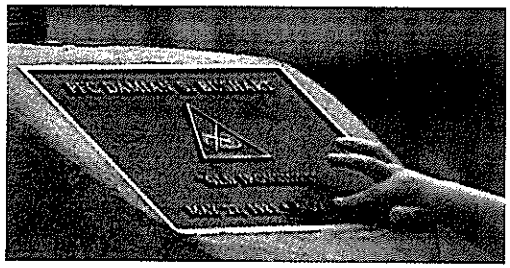

The ashes from an American flag, soil from the nation's first Lest They Be Forgotten memorial dedicated to Sgt. Jason Jordan in Alba, Alabama, soil from Michigan's first Lest The Be Forgotten memorial dedicated to Pfc. Damian S. Bushart, in Waterford, Michigan, and soil from each following memorial have been combined.

A sampling of earth is taken from each succeeding memorial site, combined with the original soils and then blended into the concrete as each new memorial is constructed.

In memoriam, brothers in life, unified in purpose, together in death, you will never be forgotten.

Fallen Heroes Memorial Foundation

www.arizonasoldiers.com
www.michigansoldiers.com
www.nevadasoldiers.com

© Fallen Heroes Memorial Foundation 2007
rev 0607

FALLEN HEROES
Memorial Foundation

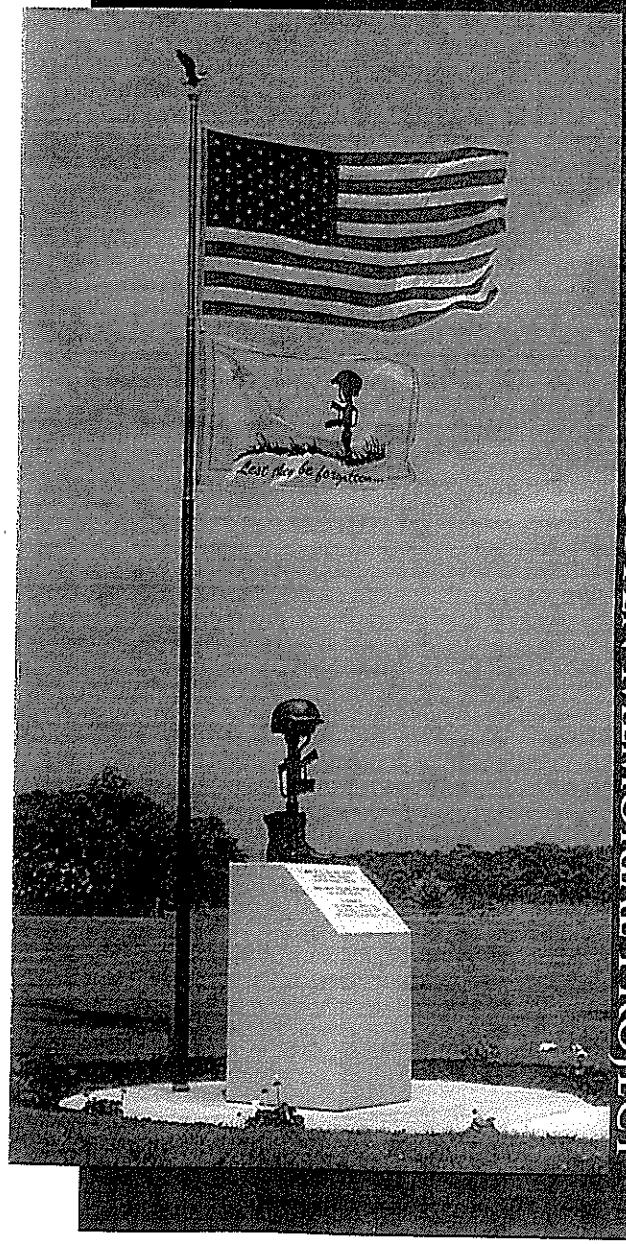

LEST THEY BE FORGOTTEN MEMORIAL PROJECT

MEMORIAL PROJECT

The Lest They Be Forgotten memorial mission is to create and establish hometown memorials to our military service members who have lost their lives defending the United States of America in the war against terrorism.

The Lest They Be Forgotten Memorial Project was founded in 2003 by Mr. Gregg Garvey who was seeking a way to honor his son, Sgt. Justin Garvey who was killed in Iraq in July 2003. Gregg's vision for the memorials stemmed from the sense of helplessness he experienced in the weeks following Justin's death. While Gregg was preparing pictures to be used in a memorial service for Justin he realized what he needed to do. "Well, then it came to me as I was sitting here. I was holding a picture of Justin and was looking at my flagpole out in front of the house. I had this vision of the memorial. As I sat and thought, the simplicity of this memorial, the basic design, I could put one in the hometown of every hero we lost or will lose in this war." Thus, the Lest They Be Forgotten campaign was born.

Knowing that a national memorial could take years to finance and build, Gregg saw the Lest They Be Forgotten project as a way to honor our fallen heroes now with each memorial being funded by private donations and fund raisers in each community.

The first memorial was dedicated in January 2005 honoring Sgt. Jason Jordan of Alba, Alabama, who was killed in the same ambush with Sgt. Justin Garvey. Five months later, the second memorial was dedicated honoring Pfc. Damian S. Bushart of Waterford, Michigan and Michigan, became the first state to have a Lest They Be Forgotten Chapter.

This led to the establishment of the Fallen Heroes Memorial Foundation expanding the vision to build memorials across America. The Fallen Heroes Memorial Foundation now has two additional chapters in Nevada and Arizona. The directors of all three state chapters are retired military personnel and one is a Gold Star Father. All are committed to carry out the memorial mission as created by founder, Gregg Garvey.

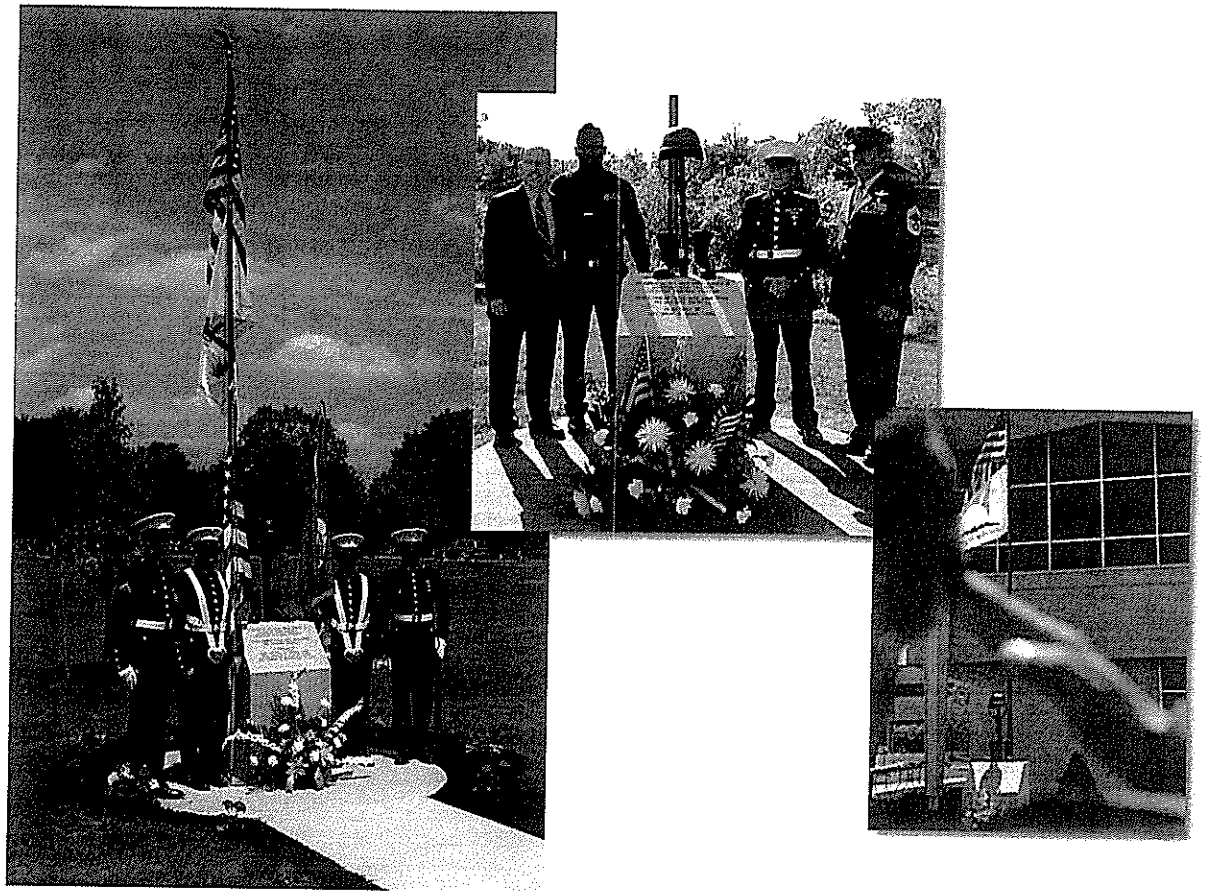

A Lest They Be Forgotten Memorial consists of an eight foot diameter concrete base, a four foot tall traditional grey granite column with a bronze field cross consisting of an M-16 rifle, helmet and boots. Behind the column is a twenty foot flagpole flying the American flag and the Lest They Be Forgotten flag for the fallen. The column bears the following inscription:

IN HONOR OF ALL WHO HAVE SERVED IN
OPERATION IRAQI FREEDOM
OPERATION ENDURING FREEDOM

NEVER FORGET THOSE WHO HAVE MADE
THE ULTIMATE SACRIFICE

IN MEMORY OF
NAME, RANK, BRANCH OF SERVICE

The cost of each memorial is $10,000. The Fallen Heroes Memorial Foundation is a not for profit organization and receives no federal, state or local funding. Each memorial is paid for through private donations and community fund raising activities.

Your tax deductible donations can be made payable to:

Fallen Heroes Memorial Foundation (FHMF)

Mail to:

Fallen Heroes Memorial Foundation (FHMF)
711 Reynolds Drive
Waterford, Michigan 48328

Credit card donations may be made through the secure ***FHMF*** web site:
www.michigansoldiers.com

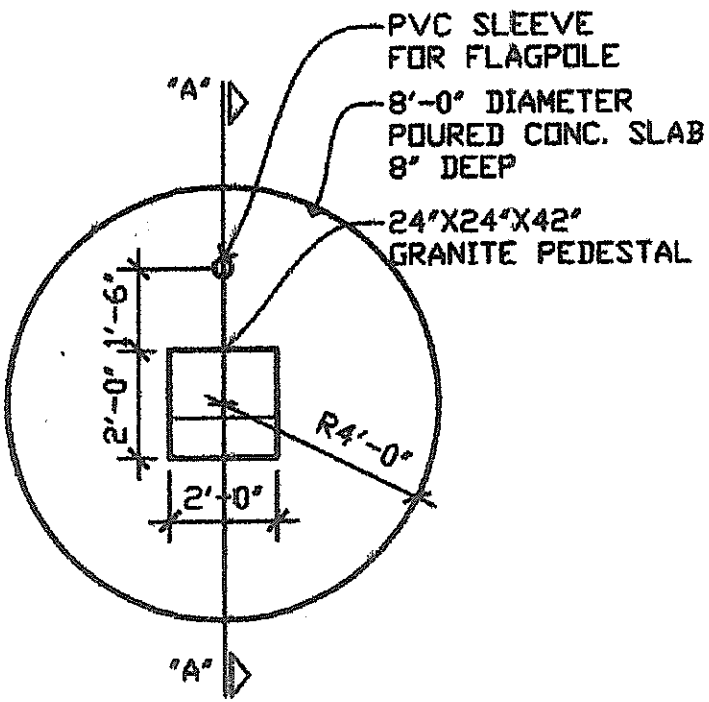

PLAN

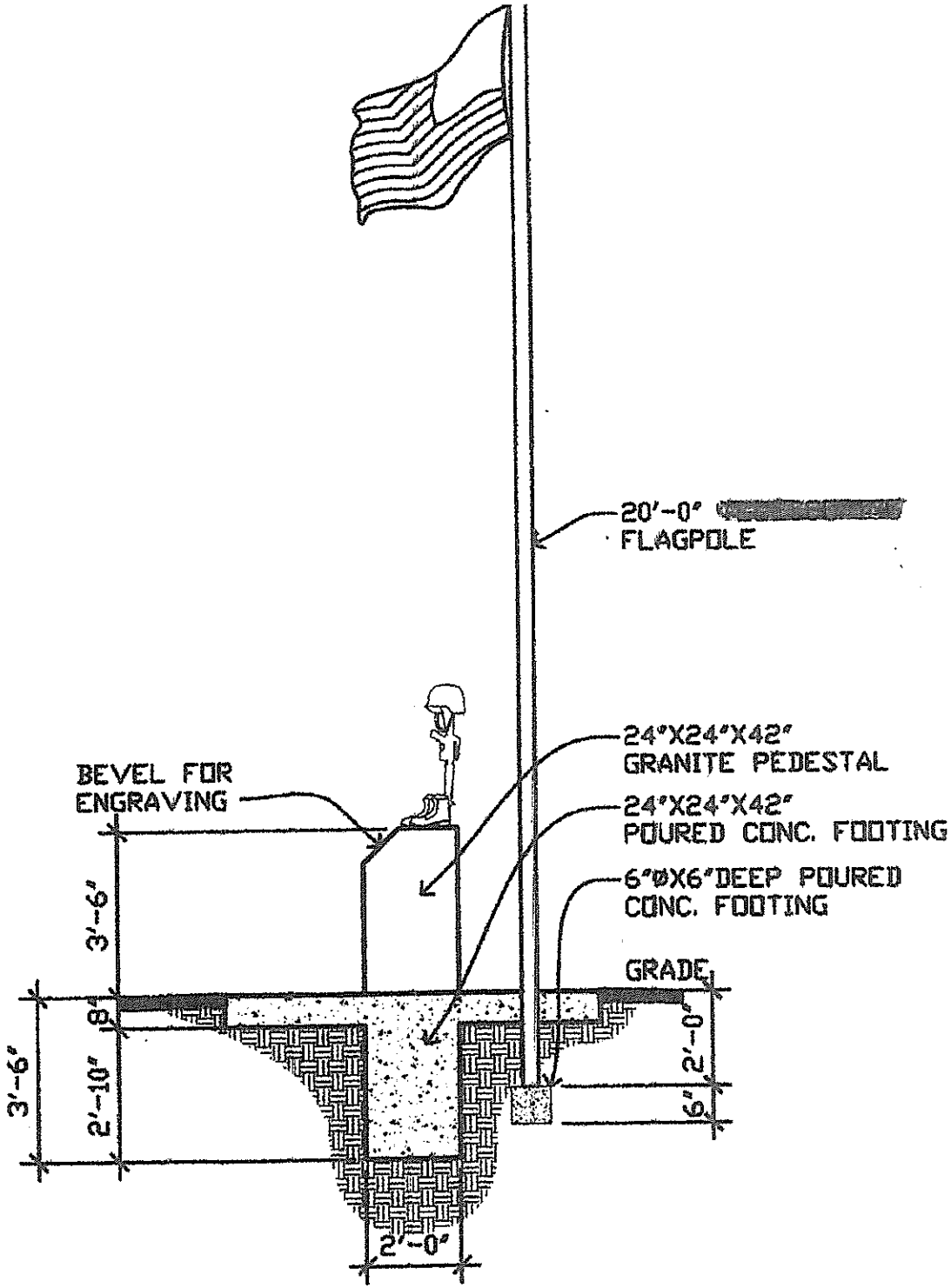

SECTION "A-A"

WARRANT: B2008-27 06/30/2008

CASH ACCOUNT: 0001A 001000 CASH

VENDOR	VENDOR NAME	R	INVOICE	PO	TYPE	DUE DATE	AMOUNT	VOUCHER	CHECK	COMMENT
1411	BLUE CROSS BLUE	00000	7-2008		DD	06/19/2008	76,858.00	34280	148219	COUNTY HEALTHCARE JULY
1946	PHARMACARE	00000	7004581-622		DD	06/19/2008	7,322.28	34281	148220	RX 6/1/08 - 6/15/08
4841	ALCHEMY MIND, LL	00000	6-12-08	35100883	INV	06/20/2008	92.00	34312	185166	INMATE PROGRAM THE WORK
3404	CHARTER COMMUNIC	00000	7-17-08	35100881	INV	06/20/2008	110.77	34313	185167	5000752958015020002
4094	DYNAMIC PHYSICAL	00000	500673	35100908	INV	06/20/2008	888.00	34288	185168	MED SERV F/LEINAAR BRETT
4047	MI SPINE & PAIN	00001	45461-2	35100905	INV	06/20/2008	80.00	34289	185169	MED SERV F/CRANK RUSSELL
3970	N'ORTHOPEDICS	00000	648040	35100904	INV	06/20/2008	732.75	34290	185170	MED SERV F/STEAD JOSH
3386	NORTHERN IMAGING	00000	1096	35100902	INV	06/20/2008	22.00	34293	185171	MED SERV F/HUGHES JAMES
3386	NORTHERN IMAGING	00000	461141061	35100901	INV	06/20/2008	38.00	34294	185171	MED SERV F/DANIELS BRAD
3386	NORTHERN IMAGING	00000	461180243	35100900	INV	06/20/2008	58.00	34295	185171	MED SERV F/BROCK ANTHONY
3386	NORTHERN IMAGING	00000	461190368	35100903	INV	06/20/2008	269.00	34292	185171	MED SERV F/LEINAAR BRETT
3386	NORTHERN IMAGING	00000	461220845	35100880	INV	06/20/2008	22.00	34314	185171	MED SERV F/STEAD JOSH
1243	OTSEGO MEMORIAL	00000	9735981	35100892	INV	06/20/2008	668.00	34303	185172	MED SERV F/PUROLL LAUREN
1243	OTSEGO MEMORIAL	00000	974372301	35100893	INV	06/20/2008	206.00	34302	185172	MED SERV F/HUGHES JAMES
1243	OTSEGO MEMORIAL	00000	9755891	35100884	INV	06/20/2008	544.50	34311	185172	MED SERV F/MAMMEL K
1243	OTSEGO MEMORIAL	00000	9758041	35100891	INV	06/20/2008	207.00	34304	185172	MED SERV F/DANIELS, BRAD
1243	OTSEGO MEMORIAL	00000	9760401	35100887	INV	06/20/2008	523.00	34308	185172	MED SERV F/HODGES DAN
1243	OTSEGO MEMORIAL	00000	9766352	35100889	INV	06/20/2008	232.12	34306	185172	MED SERV F/HAMBLIN, DANIEL
1243	OTSEGO MEMORIAL	00000	9768147	35100890	INV	06/20/2008	1,599.50	34305	185172	MED SERV F/MENDOZA, ANGELI
1243	OTSEGO MEMORIAL	00000	97688149	35100888	INV	06/20/2008	2,950.50	34307	185172	MED SERV F/BROWN CHARL
1243	OTSEGO MEMORIAL	00000	9770187	35100886	INV	06/20/2008	1,297.37	34309	185172	MED SERVICE FOR BROCK A.
1243	OTSEGO MEMORIAL	00000	977262201	35100906	INV	06/20/2008	1,583.25	34287	185172	MED SERV F/LEINAAR BRETT
1243	OTSEGO MEMORIAL	00000	9774422	35100907	INV	06/20/2008	963.65	34286	185172	MED SERV F/CZINKI DAVID
1243	OTSEGO MEMORIAL	00000	9783124	35100876	INV	06/20/2008	83.00	34316	185172	MED SERV F/STEAD J
1243	OTSEGO MEMORIAL	00000	9786342	35100885	INV	06/20/2008	27.50	34310	185172	MED SERV F/MAMMEL K
2746	OTSEGO MEMORIAL	00000	11438	35100894	INV	06/20/2008	82.00	34301	185173	MED SERVICE F/MAMMEL K
2746	OTSEGO MEMORIAL	00000	23907-020508	35100898	INV	06/20/2008	129.00	34297	185173	MED SERV F/DANIELS, BRAD
2746	OTSEGO MEMORIAL	00000	33267	35100897	INV	06/20/2008	59.50	34298	185173	MED SERV F/MENDOZA ANGELIN
2746	OTSEGO MEMORIAL	00000	34965	35100877	INV	06/20/2008	41.00	34315	185173	MEDS SERVICE F/SIDES
2746	OTSEGO MEMORIAL	00000	41044	35100895	INV	06/20/2008	83.50	34300	185173	MED SERV F/BROWN CHARLOTTE
2746	OTSEGO MEMORIAL	00000	43703	35100896	INV	06/20/2008	70.50	34299	185173	MED SERV FOR HAMBLIN
2746	OTSEGO MEMORIAL	00000	50629	35100878	INV	06/20/2008	98.50	34291	185173	MED SERV F/STEAD JOSH
2746	OTSEGO MEMORIAL	00000	6013-0	35100899	INV	06/20/2008	173.50	34296	185173	MED SERV FOR HUGHES JAMES
2154	LOG HAVEN II	00000	MCNERNEY	69000921	INV	06/24/2008	375.00	34344	185303	MCNERNEY, PAST DUE RENT
2937	MSHDA	00000	TRNG062608	69000918	INV	06/24/2008	10.00	34345	185304	JUNE 26 MSHDA TRAINING
2476	NORTHERN CREDIT	00000	1759112	69000922	INV	06/24/2008	500.00	34343	185305	CREDITOR #1759112 COLLECTI

99,000.69 CASH ACCOUNT 0001A 001000 TOTAL

CASH ACCOUNT: 0001A 001000 CASH WARRANT: B2008-27 06/30/2008

VENDOR	G/L ACCOUNTS	R	PO	TYPE	DUE DATE	AMOUNT		INVOICE	VOUCHER	CHECK
1013 AFLAC #3010105		00000		INV	06/26/2008			159390	34531	
1 0704L	231281	PAYROLL		AFLAC		1,601.78				
							1,601.78			
						CHECK TOTAL	1,601.78			----------
1013 AFLAC #3010105		00000		INV	06/26/2008			568515	34532	
1 0704L	231281	PAYROLL		AFLAC		1,601.78				
							1,601.78			
						CHECK TOTAL	1,601.78			----------
4511 AIRGAS GREAT LAKES		0000069901111		INV	06/26/2008			112501287	34469	
1 588E699	726050	OPERATIONS		MAINT SUPP		119.83				
							119.83			
						CHECK TOTAL	119.83			----------
4841 ALCHEMY MIND, LLC		0000035100912		INV	06/26/2008			062408	34543	
1 595E351	726000	JAIL COMM		SUPPLIES		30.00				
							30.00			
4841 ALCHEMY MIND, LLC		0000035100911		INV	06/26/2008			62408	34557	
1 205E301	704400 PLSC	EXPS		TRAINING		84.00				
							84.00			
						CHECK TOTAL	114.00			----------
5350 PHIL ALEXANDER		0000072000873		INV	06/26/2008			062408	34515	
1 101E721	703040	PLAN ZONE		PER DIEM		40.00				
							40.00			
						CHECK TOTAL	40.00			----------
1570 ALLTEL		0000037100844		INV	06/26/2008			060408	34561	
1 249E371	930230	BUILDING		CELL PH		122.43				
							122.43			
						CHECK TOTAL	122.43			----------
1828 ALPINE COMPUTERS		0000069901108		INV	06/26/2008			80605151423	34468	
1 588E699	726000	OPERATIONS		SUPPLIES		1,920.00				
							1,920.00			
1828 ALPINE COMPUTERS		0000053700930		INV	06/26/2008			G20698	34586	
1 281E537	920400	AIRPORT		MAINT SVC		64.99				
							64.99			
1828 ALPINE COMPUTERS		0000053700929		INV	06/26/2008			G20762	34585	
1 281E537	920400	AIRPORT		MAINT SVC		45.00				
							45.00			
						CHECK TOTAL	2,029.99			----------
1485 ALS MARKET		00000		INV	07/01/2008			06-25-2008	34377	
1 0701L	271130	GEN AGNCY		RESTITUT		12.90				
							12.90			

CASH ACCOUNT: 0001A 001000 CASH WARRANT: B2008-27 06/30/2008

VENDOR	G/L ACCOUNTS	R	PO	TYPE	DUE DATE	AMOUNT		INVOICE	VOUCHER	CHECK
1485 ALS MARKET		00000		INV	07/01/2008			6-25-2008	34378	
1 0701L	271130	GEN AGNCY		RESTITUT		45.00				
							45.00			
				CHECK TOTAL			57.90			----------
1504 AMERICAN FIDELITY ASSURAN		00000		INV	07/01/2008			A181517	34354	
1 0704L	231285	PAYROLL		COURT AFA		15.50				
							15.50			
				CHECK TOTAL			15.50			----------
4306 ANIMAL CARE EQUIPMENT		0000021200923		INV	06/26/2008			1089883	34559	
1 212E430	726000	ANM CTRL		SUPPLIES		50.00				
2 212E430	726025	ANM CTRL		JANITORIAL		141.15				
3 212E430	726200	ANM CTRL		BOOKS		104.95				
4 212E430	920400	ANM CTRL		MAINT SVC		142.91				
							439.01			
				CHECK TOTAL			439.01			----------
1027 AVFUEL CORPORATION		0000053700920		INV	06/26/2008			2670879	34576	
1 281E537	930664	AIRPORT		AIRPL FUEL		9,397.18				
							9,397.18			
				CHECK TOTAL			9,397.18			----------
5001 DAVID BENTLEY		00000		INV	07/01/2008			05-30-2008	34379	
1 0701L	271130	GEN AGNCY		RESTITUT		8.40				
							8.40			
5001 DAVID BENTLEY		00000		INV	07/01/2008			06-25-2008	34380	
1 0701L	271130	GEN AGNCY		RESTITUT		84.00				
							84.00			
				CHECK TOTAL			92.40			----------
5211 JANELLE BOGUE		00000		INV	07/01/2008			04-29-2008	34381	
1 0701L	271130	GEN AGNCY		RESTITUT		5.00				
							5.00			
5211 JANELLE BOGUE		00000		INV	07/01/2008			05-30-2008	34382	
1 0701L	271130	GEN AGNCY		RESTITUT		2.50				
							2.50			
5211 JANELLE BOGUE		00000		INV	07/01/2008			06-25-2008	34383	
1 0701L	271130	GEN AGNCY		RESTITUT		83.98				
							83.98			
				CHECK TOTAL			91.48			----------
5349 CHRISTA BONO		0000072000872		INV	06/26/2008			062408	34514	
1 101E721	703040	PLAN ZONE		PER DIEM		40.00				
2 101E721	930500	PLAN ZONE		TRAVEL		2.40				
							42.40			
				CHECK TOTAL			42.40			----------

CASH ACCOUNT: 0001A 001000 CASH WARRANT: B2008-27 06/30/2008

VENDOR	G/L ACCOUNTS	R	PO	TYPE	DUE DATE	AMOUNT		INVOICE	VOUCHER	CHECK
5353 BRIM, THOMAS J		00000		INV	06/18/2008			REFUND-OVERP	34467	
1 0701L	275000 PARTL	GEN AGNCY		DUE TXPYR		232.70				
							232.70			
					CHECK TOTAL		232.70			----------
1546 TIMOTHY BURKE		0000069000927		INV	06/26/2008			062208	34485	
1 101E332	801030	MOTORCYCLE		TECHNICAL		648.00				
							648.00			
					CHECK TOTAL		648.00			----------
3294 BURNSIDE RV		00001		INV	07/01/2008			06-25-2008	34385	
1 0701L	271130	GEN AGNCY		RESTITUT		50.00				
							50.00			
					CHECK TOTAL		50.00			----------
2213 BRADLEY BUTCHER		00001		INV	07/01/2008			06-25-2008	34386	
1 0701L	271130	GEN AGNCY		RESTITUT		100.00				
							100.00			
					CHECK TOTAL		100.00			----------
1711 CASE CREDIT		0000069901107		INV	06/26/2008			11401	34462	
1 588E699	920400	OPERATIONS		MAINT SVC		236.86				
							236.86			
1711 CASE CREDIT		0000069901112		INV	06/26/2008			11404	34472	
1 588E699	920400	OPERATIONS		MAINT SVC		892.53				
							892.53			
1711 CASE CREDIT		0000069901106		INV	06/26/2008			27161	34463	
1 588E699	726050	OPERATIONS		MAINT SUPP		344.62				
							344.62			
1711 CASE CREDIT		0000069901104		INV	06/26/2008			27610	34465	
1 588E699	726025	OPERATIONS		JANITORIAL		348.50				
							348.50			
1711 CASE CREDIT		0000069901105		INV	06/26/2008			27676	34464	
1 588E699	726050	OPERATIONS		MAINT SUPP		209.50				
							209.50			
1711 CASE CREDIT		0000069901120		INV	06/26/2008			28410	34540	
1 588E699	726050	OPERATIONS		MAINT SUPP		139.38				
							139.38			
					CHECK TOTAL		2,171.39			----------
1047 CELLULAR ONE RETAIL SERVI		00003		INV	07/01/2008			06-25-2008	34387	
1 0701L	271130	GEN AGNCY		RESTITUT		100.00				
							100.00			
					CHECK TOTAL		100.00			----------
2064 CENTURYTEL		0000142700856		INV	06/26/2008			ELMIRA-TWP68	34455	
1 261E427	930210	EMGR SVCS		TELEPHONE		89.21				
							89.21			

CASH ACCOUNT: 0001A 001000 CASH

WARRANT: B2008-27 06/30/2008

VENDOR	G/L ACCOUNTS	R	PO	TYPE	DUE DATE	AMOUNT		INVOICE	VOUCHER	CHECK
						CHECK TOTAL	89.21			----------
4353	CHESTER TOWNSHIP TREASUER	00000		INV	06/18/2008			07-DNR-PILT	34262	
	1 0701L 274009	GEN AGNCY		UNDST PILT		493.16				
							493.16			
						CHECK TOTAL	493.16			----------
2491	CHILD & FAMILY SERVICES O	00000		INV	07/01/2008			5-25-08	34420	
	1 292E662 930810	CHILD CARE		OTHR INST		3,399.76				
							3,399.76			
						CHECK TOTAL	3,399.76			----------
1487	CINTAS CORPORATION	0000153700926		INV	06/26/2008			53108	34582	
	1 281E537 940010	AIRPORT		OUTSIDE		116.40				
							116.40			
						CHECK TOTAL	116.40			----------
1793	ROBERT CISZEWSKI	00000		INV	07/01/2008			06-25-2008	34388	
	1 0701L 271130	GEN AGNCY		RESTITUT		125.00				
							125.00			
						CHECK TOTAL	125.00			----------
1051	CITY OF GAYLORD	0000021200917		INV	06/26/2008			A-C-JUNE08	34477	
	1 212E430 920200	ANM CTRL		H2O/SEWAGE		35.33				
							35.33			
1051	CITY OF GAYLORD	00000		INV	06/26/2008			LNDUS	34491	
	1 637E265 920200 LNDUS	BLDG GRNDS		H2O/SEWAGE		198.65				
							198.65			
						CHECK TOTAL	233.98			----------
5045	CLAIRES	00000		INV	07/01/2008			03-26-2008	34376	
	1 0701L 271130	GEN AGNCY		RESTITUT		6.00				
							6.00			
						CHECK TOTAL	6.00			----------
3148	CMP DISTRIBUTORS	0000030100909		INV	06/26/2008			7203	34444	
	1 101E301 726000	SHERIFF		SUPPLIES		299.50				
							299.50			
3148	CMP DISTRIBUTORS	0000035100919		INV	06/26/2008			7962	34552	
	1 264E362 704400	CORR TRAIN		TRAINING		1,836.00				
							1,836.00			
						CHECK TOTAL	2,135.50			----------
5142	MICHAEL COLOSIMO	0000072000870		INV	06/26/2008			061608	34512	
	1 101E721 703040	PLAN ZONE		PER DIEM		40.00				
	2 101E721 930500	PLAN ZONE		TRAVEL		10.00				
							50.00			

CASH ACCOUNT: 0001A 001000 CASH

WARRANT: B2008-27 06/30/2008

VENDOR	G/L ACCOUNTS	R	PO	TYPE	DUE DATE	AMOUNT		INVOICE	VOUCHER	CHECK
					CHECK TOTAL		50.00			----------
1059 CONSUMERS ENERGY		00000		INV	06/26/2008			33620020508	34489	
	1 261E427 930620	EMGR SVCS		ELECTRIC		51.36				
							51.36			
1059 CONSUMERS ENERGY		00000		INV	06/26/2008			37510080608	34487	
	1 637E265 930620	ALPCT BLDG GRNDS		ELECTRIC		140.74				
							140.74			
1059 CONSUMERS ENERGY		00000		INV	06/26/2008			48430010608	34488	
	1 637E265 930620	ALPCT BLDG GRNDS		ELECTRIC		137.85				
							137.85			
1059 CONSUMERS ENERGY		0000053700923		INV	06/26/2008			49490060608	34579	
	1 281E537 930620	AIRPORT		ELECTRIC		285.58				
							285.58			
					CHECK TOTAL		615.53			----------
5343 JAMES COOK		00000		INV	07/01/2008			06-25-2008	34389	
	1 0701L 271130	GEN AGNCY		RESTITUT		25.00				
							25.00			
					CHECK TOTAL		25.00			----------
3018 COPI-ISD		00000		INV	06/18/2008			07-DNR-PILT	34263	
	1 0701L 274009	GEN AGNCY		UNDST PILT		1,385.52				
							1,385.52			
					CHECK TOTAL		1,385.52			----------
3670 GLENN CRANE		00000		INV	06/20/2008			7-2008	34339	
	1 101E853 940110	HLTH RETIR		HLTH RET		250.00				
							250.00			
					CHECK TOTAL		250.00			----------
1606 CUMMINS BRIDGEWAY LLC		00001		INV	07/01/2008			06-25-2008	34384	
	1 0701L 271130	GEN AGNCY		RESTITUT		80.00				
							80.00			
					CHECK TOTAL		80.00			----------
2365 MATTHEW & BRENDA DEPALMA		00000		INV	07/01/2008			06-25-2008	34390	
	1 0701L 271130	GEN AGNCY		RESTITUT		68.80				
							68.80			
					CHECK TOTAL		68.80			----------
5339 KEITH DEYOUNG		0000042700860		INV	06/26/2008			ERG	34451	
	1 261E427 930450	EMGR SVCS		SHIP/MAIL		12.00				
							12.00			
					CHECK TOTAL		12.00			----------
1930 DOUBLE G DRYWALL		00000		INV	07/01/2008			06-25-2008	34392	

CASH ACCOUNT: 0001A 001000 CASH WARRANT: B2008-27 06/30/2008

VENDOR	G/L ACCOUNTS		R	PO	TYPE	DUE DATE	AMOUNT		INVOICE	VOUCHER	CHECK
	1 0701L	271130	GEN AGNCY		RESTITUT		10.00				
								10.00			
						CHECK TOTAL		10.00			----------
1081 DOVER TOWNSHIP			00001		INV	06/18/2008			07-DNR-PILT	34261	
	1 0701L	274009	GEN AGNCY		UNDST PILT		131.39				
								131.39			
						CHECK TOTAL		131.39			----------
1492 DTE ENERGY			0000053700928		INV	06/26/2008			6000140608	34584	
	1 281E537	930610	AIRPORT		NATURL GAS		76.43				
								76.43			
1492 DTE ENERGY			0000053700927		INV	06/26/2008			6000480608	34583	
	1 281E537	930610	AIRPORT		NATURL GAS		882.93				
								882.93			
						CHECK TOTAL		959.36			----------
1082 DUNNS			0000030100912		INV	06/26/2008			609012	34567	
	1 101E301	726000	SHERIFF		SUPPLIES		73.04				
	2 101E302	726000	CIVIL DIV		SUPPLIES		14.96				
	3 101E351	726000	JAIL		SUPPLIES		34.17				
								122.17			
1082 DUNNS			0000021500807		INV	06/26/2008			618187	34473	
	1 256E215	726000	ROD AUTO		SUPPLIES		201.92				
								201.92			
1082 DUNNS			0000042700854		INV	06/26/2008			619468	34457	
	1 261E427	726000	EMGR SVCS		SUPPLIES		64.99				
								64.99			
1082 DUNNS			0000069901113		INV	06/26/2008			6222290	34536	
	1 588E699	726000	OPERATIONS		SUPPLIES		35.28				
								35.28			
1082 DUNNS			0000026700840		INV	06/26/2008			PROS-OFFICE	34481	
	1 101E267	726000	PROSECUTOR		SUPPLIES		204.24				
	2 101E267	930983	PROSECUTOR		VCTM RIGHT		9.38				
								213.62			
						CHECK TOTAL		637.98			----------
1801 MARK ECKSTEIN			0000072000863		INV	06/26/2008			062408	34507	
	1 101E721	703040	PLAN ZONE		PER DIEM		40.00				
	2 101E721	930500	PLAN ZONE		TRAVEL		16.00				
								56.00			
						CHECK TOTAL		56.00			----------
5328 EDELWEISS GARDEN CLUB			0000053700931		INV	06/26/2008			279209	34587	
	1 281E537	970300	AIRPORT		PROP-IMPRV		915.75				
								915.75			
						CHECK TOTAL		915.75			----------

CASH ACCOUNT: 0001A 001000 CASH WARRANT: B2008-27 06/30/2008

VENDOR	G/L ACCOUNTS	R	PO	TYPE	DUE DATE	AMOUNT		INVOICE	VOUCHER	CHECK
4357 ELMIRA TWP TREASUER		00000		INV	06/18/2008			07-DNR-PILT	34260	
1 0701L	274009	GEN AGNCY		UNDST PILT		74.00				
							74.00			
						CHECK TOTAL	74.00			----------
1088 JOHN G ERNST		0000072000860		INV	06/26/2008			061608	34506	
1 101E721	703040	PLAN ZONE		PER DIEM		40.00				
2 101E721	930500	PLAN ZONE		TRAVEL		10.80				
							50.80			
						CHECK TOTAL	50.80			----------
1094 FAMILY HEATING & COOLING		00000		INV	07/01/2008			06-25-2008	34393	
1 0701L	271130	GEN AGNCY		RESTITUT		45.00				
							45.00			
						CHECK TOTAL	45.00			----------
5332 FERLINZ, JACK DR		00000		INV	06/18/2008			REFUND	34279	
1 0701L	275000	GEN AGNCY		DUE TXPYR		42.02				
							42.02			
						CHECK TOTAL	42.02			----------
1802 FIFTH THIRD BANK		00000		INV	07/01/2008			06-25-2008	34394	
1 0701L	271130	GEN AGNCY		RESTITUT		20.00				
							20.00			
						CHECK TOTAL	20.00			----------
1105 FORWARD CORPORATION		00001		INV	07/01/2008			06-25-2008	34395	
1 0701L	271130	GEN AGNCY		RESTITUT		100.00				
							100.00			
						CHECK TOTAL	100.00			----------
5247 FOX, JEFFREY		00000		INV	07/01/2008			1280	34425	
1 0701L	271148	GEN AGNCY		RESTITUT		60.00				
							60.00			
						CHECK TOTAL	60.00			----------
5330 LILLIAN FOX		0000069000920		INV	06/26/2008			BURIAL	34458	
1 101E681	930960	VET BURIAL		VET BURIAL		300.00				
							300.00			
						CHECK TOTAL	300.00			----------
4662 FUN COUNTY EMBROIDERY & S		0000021200918		INV	06/26/2008			678572	34476	
1 212E430	726046	ANM CTRL		UNIFORM		38.16				
							38.16			
						CHECK TOTAL	38.16			----------
5344 FUN TIME TRAVEL		00000		INV	07/01/2008			06-25-2008	34396	

CASH ACCOUNT: 0001A 001000 CASH WARRANT: B2008-27 06/30/2008

VENDOR	G/L ACCOUNTS	R	PO	TYPE	DUE DATE	AMOUNT		INVOICE	VOUCHER	CHECK
	1 0701L 271130	GEN AGNCY		RESTITUT		279.00				
							279.00			
					CHECK TOTAL		279.00			----------
1593 GALL'S INC.		0000021200919		INV	06/26/2008			593652910002	34563	
	1 212E430 726046	ANM CTRL		UNIFORM		53.95				
							53.95			
					CHECK TOTAL		53.95			----------
2281 GASLIGHT MEDIA		0000042700857		INV	06/26/2008			23755	34454	
	1 261E427 920410	EMGR SVCS		SVC CNTRCT		200.00				
							200.00			
2281 GASLIGHT MEDIA		0000069901121		INV	06/26/2008			24085	34537	
	1 588E699 940010	OPERATIONS		OUTSIDE		59.95				
							59.95			
2281 GASLIGHT MEDIA		00000		INV	06/26/2008			24086	34492	
	1 101E864 930240	DISTRIBUTE		NETWORK		800.00				
							800.00			
2281 GASLIGHT MEDIA		0000042700864		INV	06/26/2008			24088	34450	
	1 261E427 920410	EMGR SVCS		SVC CNTRCT		200.00				
							200.00			
2281 GASLIGHT MEDIA		00000		INV	06/26/2008			24089	34493	
	1 205E301 930210	EXPS		TELEPHONE		16.00				
							16.00			
2281 GASLIGHT MEDIA		0000021200921		INV	06/26/2008			24090	34565	
	1 212E430 920410	ANM CTRL		SVC CNTRCT		59.95				
							59.95			
					CHECK TOTAL		1,335.90			----------
1054 GAYLORD CITY TREASURER		00000		INV	07/01/2008			06-25-2008	34363	
	1 0701L 221000	GEN AGNCY		DUE CITY		978.45				
							978.45			
					CHECK TOTAL		978.45			----------
1119 GAYLORD COMMUNITY SCHOOLS		00000		INV	06/18/2008			07-DNR-PILT	34266	
	1 0701L 274009	GEN AGNCY		UNDST PILT		1,637.70				
							1,637.70			
					CHECK TOTAL		1,637.70			----------
1113 GAYLORD DRY CLEANERS		0000030100910		INV	06/26/2008			MAY-2008	34494	
	1 101E301 920410	SHERIFF		SVC CNTRCT		60.00				
	2 101E302 920410	CIVIL DIV		SVC CNTRCT		60.00				
							120.00			
					CHECK TOTAL		120.00			----------
1355 GAYLORD FAMILY PRACTICE		0000035100916		INV	06/26/2008			1990371	34549	
	1 101E351 726035	JAIL		MEDICAL		76.00				
							76.00			

CASH ACCOUNT: 0001A 001000 CASH WARRANT: B2008-27 06/30/2008

VENDOR	G/L ACCOUNTS	R	PO	TYPE	DUE DATE	AMOUNT		INVOICE	VOUCHER	CHECK
					CHECK TOTAL		76.00			----------
1117 GAYLORD FORD		0000030100907		INV	06/26/2008			30308	34446	
1 101E301	726050	SHERIFF		MAINT SUPP		554.55				
							554.55			
					CHECK TOTAL		554.55			----------
1134 GAYLORD HERALD TIMES		00000		INV	06/19/2008			5-31-2008-AD	34284	
1 637E265	726000	BLDG GRNDS		SUPPLIES		38.10				
							38.10			
					CHECK TOTAL		38.10			----------
1520 GAYLORD MACHINE & FABRICA		0000069901119		INV	06/26/2008			9325	34539	
1 588E699	726050	OPERATIONS		MAINT SUPP		30.36				
							30.36			
					CHECK TOTAL		30.36			----------
5289 GREAT LAKES REDI MIX		00000		INV	07/01/2008			06-25-2008	34397	
1 0701L	271130	GEN AGNCY		RESTITUT		25.00				
							25.00			
					CHECK TOTAL		25.00			----------
3116 HALL VETERINARY CLINIC		0000021200914		INV	06/26/2008			30444	34459	
1 212E430	930980	ANM CTRL		STERILIZE		419.17				
							419.17			
					CHECK TOTAL		419.17			----------
4993 THOMAS HARTOON		00000		INV	07/01/2008			05-30-2008	34398	
1 0701L	271130	GEN AGNCY		RESTITUT		6.60				
							6.60			
4993 THOMAS HARTOON		00000		INV	07/01/2008			06-25-2008	34399	
1 0701L	271130	GEN AGNCY		RESTITUT		73.00				
							73.00			
					CHECK TOTAL		79.60			----------
1500 HILLTOP EXPRESS		00000		INV	07/01/2008			02-29-2008	34373	
1 0701L	271130	GEN AGNCY		RESTITUT		2.75				
							2.75			
1500 HILLTOP EXPRESS		00000		INV	07/01/2008			03-26-2008	34374	
1 0701L	271130	GEN AGNCY		RESTITUT		2.75				
							2.75			
1500 HILLTOP EXPRESS		00000		INV	07/01/2008			04-29-2008	34372	
1 0701L	271130	GEN AGNCY		RESTITUT		1.10				
							1.10			
1500 HILLTOP EXPRESS		00000		INV	07/01/2008			06-25-2008	34375	
1 0701L	271130	GEN AGNCY		RESTITUT		4.40				
							4.40			

CASH ACCOUNT: 0001A 001000 CASH WARRANT: B2008-27 06/30/2008

VENDOR	G/L ACCOUNTS	R	PO	TYPE	DUE DATE	AMOUNT		INVOICE	VOUCHER	CHECK
						CHECK TOTAL	11.00			----------
3171 MARCIA HODGE		00000		INV	07/01/2008			08-7959-GA	34353	
1	101E131 930830	CIRCT CT		CARE GIVER		30.00				
2	101E131 930500	CIRCT CT		TRAVEL		9.60				
							39.60			
						CHECK TOTAL	39.60			----------
1135 HOEKSTRA TRANSPORTATION I		0000069901115		INV	06/26/2008			c10065799	34534	
1	588E699 726050	OPERATIONS		MAINT SUPP		205.00				
							205.00			
						CHECK TOTAL	205.00			----------
3871 DUANE HOFFMAN		0000072000867		INV	06/26/2008			062408	34509	
1	101E721 703040	PLAN ZONE		PER DIEM		40.00				
2	101E721 930500	PLAN ZONE		TRAVEL		6.40				
							46.40			
						CHECK TOTAL	46.40			----------
1145 IMAGE FACTORY INC		00000		INV	06/18/2008			SUPPLYS	34347	
1	101E253 726000	TREASURER		SUPPLIES		15.75				
							15.75			
						CHECK TOTAL	15.75			----------
1145 IMAGE FACTORY INC		00000		INV	06/18/2008			SUPPLYS-SS	34342	
1	516E253 726000	TRS DELQ		SUPPLIES		57.00				
							57.00			
						CHECK TOTAL	57.00			----------
2282 IMPREST CASH, OTSEGO COUN		0000030100915		INV	06/26/2008			JUNE-2008	34566	
1	101E301 726000	SHERIFF		SUPPLIES		10.97				
2	101E301 930450	SHERIFF		SHIP/MAIL		4.80				
3	101E301 930500	SHERIFF		TRAVEL		72.00				
4	101E351 704400	JAIL		TRAINING		81.00				
5	101E351 726000	JAIL		SUPPLIES		6.74				
							175.51			
						CHECK TOTAL	175.51			----------
1845 INTERNATIONAL CODE COUNCI		0000037100845		INV	06/26/2008			1010609	34517	
1	249E371 726200	BUILDING		BOOKS		500.00				
2	249E371 801020	BUILDING		PROFESSNL		368.40				
							868.40			
1845 INTERNATIONAL CODE COUNCI		0000037100846		INV	06/26/2008			TABS	34516	
1	249E371 726000	BUILDING		SUPPLIES		99.00				
							99.00			
						CHECK TOTAL	967.40			----------

CASH ACCOUNT: 0001A 001000 CASH WARRANT: B2008-27 06/30/2008

VENDOR	G/L ACCOUNTS	R	PO	TYPE	DUE DATE	AMOUNT		INVOICE	VOUCHER	CHECK
1151 MIKE JAROSZ		0000069000926		INV	06/26/2008			062308	34486	
1 101E332	801030	MOTORCYCLE		TECHNICAL		486.00				
2 101E332	930500	MOTORCYCLE		TRAVEL		40.00				
							526.00			
						CHECK TOTAL	526.00			----------
1371 JAYS SPORTING GOODS		00000		INV	07/01/2008			04-29-2008	34370	
1 0701L	271130	GEN AGNCY		RESTITUT		2.00				
							2.00			
1371 JAYS SPORTING GOODS		00000		INV	07/01/2008			06-25-2008	34371	
1 0701L	271130	GEN AGNCY		RESTITUT		8.00				
							8.00			
						CHECK TOTAL	10.00			----------
1152 JIMS ALPINE AUTOMOTIVE		0000069901116		INV	06/26/2008			477737	34541	
1 588E699	726050	OPERATIONS		MAINT SUPP		286.09				
							286.09			
1152 JIMS ALPINE AUTOMOTIVE		0000030100913		INV	06/26/2008			477829	34568	
1 205E301	726050	EXPS		MAINT SUPP		76.62				
							76.62			
1152 JIMS ALPINE AUTOMOTIVE		0000069901117		INV	06/26/2008			478371	34542	
1 588E699	726050	OPERATIONS		MAINT SUPP		299.06				
							299.06			
						CHECK TOTAL	661.77			----------
2502 JOHANNESBURG/LEWISTON SCH		00000		INV	07/01/2008			1282	34428	
1 0701L	271148	GEN AGNCY		RESTITUT		7.48				
							7.48			
						CHECK TOTAL	7.48			----------
2502 JOHANNESBURG/LEWISTON SCH		00000		INV	06/18/2008			07-DNR-PILT	34265	
1 0701L	274009	GEN AGNCY		UNDST PILT		911.23				
							911.23			
						CHECK TOTAL	911.23			----------
1154 JOHNSON OIL COMPANY		0000053700924		INV	06/26/2008			053108	34580	
1 281E537	930660	AIRPORT		GAS		658.56				
							658.56			
1154 JOHNSON OIL COMPANY		0000030100914		INV	06/26/2008			Q299500	34569	
1 101E301	726050	SHERIFF		MAINT SUPP		28.95				
2 101E301	930660	SHERIFF		GAS		3.00				
							31.95			
						CHECK TOTAL	690.51			----------
1154 JOHNSON OIL COMPANY		00001		INV	07/01/2008			06-25-2008	34400	
1 0701L	271130	GEN AGNCY		RESTITUT		45.00				
							45.00			

CASH ACCOUNT: 0001A 001000 CASH

WARRANT: B2008-27 06/30/2008

VENDOR	G/L ACCOUNTS	R	PO	TYPE	DUE DATE	AMOUNT		INVOICE	VOUCHER	CHECK
						CHECK TOTAL	45.00			----------
5335 K&M AUTOMOTIVE TECH INDUS		0000025700828		INV	06/26/2008			2845	34479	
1	101E257 920400	EQ		MAINT SVC		268.83				
							268.83			
						CHECK TOTAL	268.83			----------
3338 DOUGLAS KASSUBA		0000069901110		INV	06/26/2008			200803	34466	
1	588E699 940010	OPERATIONS		OUTSIDE		925.00				
							925.00			
						CHECK TOTAL	925.00			----------
5290 LEONARD KENDZIORSKI		00000		INV	07/01/2008			06-25-2008	34401	
1	0701L 271130	GEN AGNCY		RESTITUT		1,375.00				
							1,375.00			
						CHECK TOTAL	1,375.00			----------
3559 KENMAR		0000035100910		INV	06/26/2008			64947	34544	
1	101E351 726000	JAIL		SUPPLIES		42.00				
							42.00			
						CHECK TOTAL	42.00			----------
2839 KENNETH ARNDT		0000072000866		INV	06/26/2008			061608	34505	
1	101E721 703040	PLAN ZONE		PER DIEM		40.00				
2	101E721 930500	PLAN ZONE		TRAVEL		4.00				
							44.00			
						CHECK TOTAL	44.00			----------
1369 CHARLES KLEE		0000072000862		INV	06/26/2008			061608	34503	
1	101E721 703040	PLAN ZONE		PER DIEM		40.00				
2	101E721 930500	PLAN ZONE		TRAVEL		4.80				
							44.80			
						CHECK TOTAL	44.80			----------
1156 KMART		0000035100913		INV	06/26/2008			02519205	34546	
1	205E301 726000	EXPS		SUPPLIES		10.47				
							10.47			
						CHECK TOTAL	10.47			----------
1935 KOHL'S		00000		INV	07/01/2008			06-25-2008	34402	
1	0701L 271130	GEN AGNCY		RESTITUT		60.00				
							60.00			
1935 KOHL'S		00000		INV	07/01/2008			6-25-2008	34403	
1	0701L 271130	GEN AGNCY		RESTITUT		50.00				
							50.00			
						CHECK TOTAL	110.00			----------

CASH ACCOUNT: 0001A 001000 CASH

WARRANT: B2008-27 06/30/2008

VENDOR	G/L ACCOUNTS	R	PO	TYPE	DUE DATE	AMOUNT		INVOICE	VOUCHER	CHECK
1165 LISTVAN PLUMBING & HEATIN		0000053700925		INV	06/26/2008			104042	34581	
1 281E537	940010 ARFR	AIRPORT		OUTSIDE		75.00				
							75.00			
						CHECK TOTAL	75.00			----------
2809 LIVINGSTON TOWNSHIP TREAS		00000		INV	06/18/2008			07-DNR-PILT	34259	
1 0701L	274009	GEN AGNCY		UNDST PILT		18.96				
							18.96			
						CHECK TOTAL	18.96			----------
2809 LIVINGSTON TOWNSHIP TREAS		00000		INV	06/18/2008			OVER-ON-PERS	34267	
1 0701L	275000	GEN AGNCY		DUE TXPYR		220.45				
							220.45			
						CHECK TOTAL	220.45			----------
3952 M BANK		00000		INV	07/01/2008			06-25-2008	34404	
1 0701L	271130	GEN AGNCY		RESTITUT		16.20				
							16.20			
						CHECK TOTAL	16.20			----------
5329 CAROL MACDONALD		0000069000919		INV	06/26/2008			BURIAL	34471	
1 101E681	930960	VET BURIAL		VET BURIAL		300.00				
							300.00			
						CHECK TOTAL	300.00			----------
4349 MICHAEL MANG		0000072000868		INV	06/26/2008			061608	34510	
1 101E721	703040	PLAN ZONE		PER DIEM		40.00				
							40.00			
						CHECK TOTAL	40.00			----------
4198 MAURER'S TEXTILE RENTAL		00000		INV	07/01/2008			372649	34348	
1 101E141	726000	FOC		SUPPLIES		17.49				
2 215E141	726000	FOC		SUPPLIES		3.09				
							20.58			
						CHECK TOTAL	20.58			----------
1384 MAXIMUM SECURITY		00000		INV	07/01/2008			1135720	34360	
1 101E141	940010	FOC		OUTSIDE		76.37				
2 215E141	940010	FOC		OUTSIDE		13.48				
							89.85			
1384 MAXIMUM SECURITY		0000026700841		INV	06/26/2008			1135806	34480	
1 101E267	920410	PROSECUTOR		SVC CNTRCT		89.85				
							89.85			
						CHECK TOTAL	179.70			----------
1496 MAXIMUS INC		0000026700844		INV	06/26/2008			1043877003	34519	
1 101E267	920410	PROSECUTOR		SVC CNTRCT		1,000.00				
							1,000.00			

CASH ACCOUNT: 0001A 001000 CASH WARRANT: B2008-27 06/30/2008

VENDOR	G/L ACCOUNTS	R	PO	TYPE	DUE DATE	AMOUNT		INVOICE	VOUCHER	CHECK
					CHECK TOTAL		1,000.00			----------
1496 MAXIMUS INC		00000		INV	07/01/2008			1043867-003	34417	
1 101E141	801020	FOC		PROFESSNL		1,020.00				
2 215E141	801020	FOC		PROFESSNL		180.00				
							1,200.00			
					CHECK TOTAL		1,200.00			----------
5345 MATTHEW MCLAUGHLIN		00000		INV	07/01/2008			06-25-2008	34405	
1 0701L	271130	GEN AGNCY		RESTITUT		20.80				
							20.80			
					CHECK TOTAL		20.80			----------
5331 MCNAMARA, PATRICK J		00000		INV	06/18/2008			REFUND	34278	
1 0701L	275000	GEN AGNCY		DUE TXPYR		82.29				
							82.29			
					CHECK TOTAL		82.29			----------
1170 TIMOTHY MCPHERSON		0000069000924		INV	06/26/2008			062208	34442	
1 101E332	801020	MOTORCYCLE		PROFESSNL		756.50				
							756.50			
					CHECK TOTAL		756.50			----------
2534 MEDTOX		00000		INV	07/01/2008			167055	34352	
1 101E133	726000 DRUG	UNSHARED		SUPPLIES		609.41				
							609.41			
					CHECK TOTAL		609.41			----------
1172 MICHIGAN ASSOCIATION OF C		00004		INV	07/01/2008			31059-000	34359	
1 0704L	231261	PAYROLL		HC CONTRIB		208.46				
2 101E131	704110	CIRCT CT		HOSP		3,590.76				
3 292E662	704110	CHILD CARE		HOSP		369.92				
4 0704L	231261	PAYROLL		HC CONTRIB		635.40				
							4,804.54			
					CHECK TOTAL		4,804.54			----------
1172 MICHIGAN ASSOCIATION OF C		00004		INV	07/01/2008			31059-901	34358	
1 101E131	940110	CIRCT CT		HLTH RET		769.44				
							769.44			
					CHECK TOTAL		769.44			----------
1172 MICHIGAN ASSOCIATION OF C		00004		INV	07/01/2008			JUN---JUL-08	34357	
1 0704L	231261	PAYROLL		HC CONTRIB		1,013.48				
2 101E131	704110	CIRCT CT		HOSP		10,093.50				
3 101E136	704110	DISTRICT		HOSP		1,120.97				
4 292E662	704110	CHILD CARE		HOSP		767.22				
5 101E141	704110	FOC		HOSP		5,039.26				

CASH ACCOUNT: 0001A 001000 CASH WARRANT: B2008-27 06/30/2008

VENDOR	G/L ACCOUNTS	R	PO	TYPE	DUE DATE	AMOUNT		INVOICE	VOUCHER	CHECK
6	215E141 704110	FOC		HOSP		889.30				
7	101E148 704110	PROBATE		HOSP		1,345.11				
8	0704L 231261	PAYROLL		HC CONTRIB		262.18				
							20,531.02			
				CHECK TOTAL			20,531.02			----------
1203	MID STATES BOLT & SCREW C	0000069901118		INV	06/26/2008			3162076	34535	
1	588E699 726050	OPERATIONS		MAINT SUPP		11.61				
							11.61			
				CHECK TOTAL			11.61			----------
1206	MOORE POWER ELECTRIC	00000		INV	07/01/2008			06-25-2008	34406	
1	0701L 271130	GEN AGNCY		RESTITUT		30.00				
							30.00			
				CHECK TOTAL			30.00			----------
1729	MORNING STAR PUBLISHING C	0000069000900		INV	06/26/2008			00309080	34443	
1	233E690 930300	HOUSING		ADVERTISE		410.00				
							410.00			
				CHECK TOTAL			410.00			----------
3054	NORTH POINTE PLUMBING & H	0000021200924		INV	06/26/2008			202547	34558	
1	212E430 920400	ANM CTRL		MAINT SVC		716.00				
							716.00			
				CHECK TOTAL			716.00			----------
3386	NORTHERN IMAGING ASSOCIAT	0000035100922		INV	06/26/2008			1296583	34555	
1	101E351 726035	JAIL		MEDICAL		113.00				
							113.00			
3386	NORTHERN IMAGING ASSOCIAT	0000035100920		INV	06/26/2008			461190612	34553	
1	101E351 726035	JAIL		MEDICAL		22.00				
							22.00			
3386	NORTHERN IMAGING ASSOCIAT	0000035100921		INV	06/26/2008			461197090	34554	
1	101E351 726035	JAIL		MEDICAL		22.00				
							22.00			
				CHECK TOTAL			157.00			----------
1227	NORTHWEST MICHIGAN COMMUN	0000035100909		INV	06/26/2008			061808	34545	
1	101E351 726035	JAIL		MEDICAL		108.00				
							108.00			
				CHECK TOTAL			108.00			----------
3434	NORTHWESTERN BANK-CARDMEM	00000		INV	06/26/2008			AXFORD050608	34483	
1	101E351 726000	JAIL		SUPPLIES		295.00				
2	588E699 726000	OPERATIONS		SUPPLIES		674.15				
							969.15			
				CHECK TOTAL			969.15			----------

CASH ACCOUNT: 0001A 001000 CASH WARRANT: B2008-27 06/30/2008

VENDOR	G/L ACCOUNTS		R	PO	TYPE	DUE DATE	AMOUNT		INVOICE	VOUCHER	CHECK
3434 NORTHWESTERN BANK-CARDMEM			00000		INV	06/26/2008			BURT-050608	34501	
1	645E172	930500	ADMIN		TRAVEL		118.58				
2	101E301	704400	SHERIFF		TRAINING		40.00				
3	588E699	726000	OPERATIONS		SUPPLIES		12.00				
4	499E901	970300	CAP OUTLAY		PROP-IMPRV		139.99				
5	618E447	920430	MAP		WEB MAINT		30.00				
6	101E267	930500	PROSECUTOR		TRAVEL		69.55				
7	101E101	704400	BOC		TRAINING		300.00				
8	499E901	970300	CAP OUTLAY		PROP-IMPRV		1,052.91				
9	101E267	930500	PROSECUTOR		TRAVEL		68.90				
10	208E752	726040	REC PGMS		RECREATE		290.25				
11	101E267	930500	PROSECUTOR		TRAVEL		137.80				
12	0701L	232001	GEN AGNCY		GOLF		28.40				
								2,288.38			
					CHECK TOTAL			2,288.38			----------
3434 NORTHWESTERN BANK-CARDMEM			00000		INV	06/26/2008			FRISCHMAY08	34499	
1	645E201	704400	FINANCE		TRAINING		525.00				
2	645E201	930500	FINANCE		TRAVEL		564.46				
3	588E699	726025	OPERATIONS		JANITORIAL		46.73				
4	101E648	726000	MED EXAM		SUPPLIES		63.99				
5	101E351	726000	JAIL		SUPPLIES		81.68				
6	101E648	726000	MED EXAM		SUPPLIES		153.95				
								1,435.81			
					CHECK TOTAL			1,435.81			----------
5348 FRANCES NOWAK			0000072000871		INV	06/26/2008			061608	34513	
1	101E721	703040	PLAN ZONE		PER DIEM		40.00				
2	101E721	930500	PLAN ZONE		TRAVEL		6.00				
								46.00			
					CHECK TOTAL			46.00			----------
1230 NYE UNIFORM COMPANY			0000030100911		INV	06/26/2008			203729	34518	
1	101E301	726046	SHERIFF		UNIFORM		96.92				
2	101E302	726046	CIVIL DIV		UNIFORM		445.70				
3	101E351	726046	JAIL		UNIFORM		68.62				
								611.24			
					CHECK TOTAL			611.24			----------
5352 OAKLAND POLICE ACADEMY			00000		INV	06/26/2008			TRNG	34482	
1	261E427	704400	EMGR SVCS		TRAINING		775.00				
								775.00			
					CHECK TOTAL			775.00			----------
1367 OFFICE DEPOT INC			0000020100805		INV	06/26/2008			434256181001	34529	
1	645E201	726000	FINANCE		SUPPLIES		121.96				
								121.96			

CASH ACCOUNT: 0001A 001000 CASH

WARRANT: B2008-27 06/30/2008

VENDOR	G/L ACCOUNTS	R	PO	TYPE	DUE DATE	AMOUNT		INVOICE	VOUCHER	CHECK
					CHECK TOTAL		121.96			----------
1919 OMH MEDICAL GROUP & MEDCA		00000		INV	06/19/2008			5-2008	34283	
1	101E267 726000	PROSECUTOR		SUPPLIES		50.00				
2	208E751 726000	PARKS		SUPPLIES		300.00				
3	588E699 940010	OPERATIONS		OUTSIDE		350.00				
							700.00			
					CHECK TOTAL		700.00			----------
1545 OMS COMPLIANCE SERVICES I		00000		INV	06/20/2008			47816	34418	
1	101E331 726000	MARINE		SUPPLIES		75.75				
							75.75			
1545 OMS COMPLIANCE SERVICES I		00000		INV	06/19/2008			47844	34285	
1	637E265 726000	BLDG GRNDS		SUPPLIES		75.75				
							75.75			
					CHECK TOTAL		151.50			----------
3517 THE OTSEGO CLUB & RESORT		00000		INV	07/01/2008			127x	34426	
1	0701L 271148	GEN AGNCY		RESTITUT		50.00				
							50.00			
					CHECK TOTAL		50.00			----------
1235 OTSEGO COUNTY EMS		0000035100875		INV	06/26/2008			08959	34461	
1	101E351 726035	JAIL		MEDICAL		981.90				
							981.90			
					CHECK TOTAL		981.90			----------
1243 OTSEGO MEMORIAL HOSPITAL		0000035100914		INV	06/26/2008			977430101	34551	
1	101E351 726035	JAIL		MEDICAL		83.00				
							83.00			
1243 OTSEGO MEMORIAL HOSPITAL		0000035100915		INV	06/26/2008			977788701	34550	
1	101E351 726035	JAIL		MEDICAL		102.50				
							102.50			
					CHECK TOTAL		185.50			----------
2746 OTSEGO MEMORIAL HOSPITAL/		0000035100918		INV	06/26/2008			42492	34547	
1	101E351 726035	JAIL		MEDICAL		180.00				
							180.00			
2746 OTSEGO MEMORIAL HOSPITAL/		0000035100917		INV	06/26/2008			50548	34548	
1	101E351 726035	JAIL		MEDICAL		55.50				
							55.50			
					CHECK TOTAL		235.50			----------
2969 PEGG, WILLIAM W		0000069000928		INV	06/26/2008			062208	34484	
1	101E332 801030	MOTORCYCLE		TECHNICAL		621.00				
2	101E332 930500	MOTORCYCLE		TRAVEL		64.80				
3	101E332 930660	MOTORCYCLE		GAS		45.75				
							731.55			

CASH ACCOUNT: 0001A 001000 CASH

WARRANT: B2008-27 06/30/2008

VENDOR	G/L ACCOUNTS	R	PO	TYPE	DUE DATE	AMOUNT		INVOICE	VOUCHER	CHECK
						CHECK TOTAL	731.55			----------
1252 PITNEY BOWES INC		00000		INV	07/01/2008			7555908-JN08	34350	
1	101E131 920520	CIRCT CT		RENT-VEHC		627.00				
							627.00			
						CHECK TOTAL	627.00			----------
1252 PITNEY BOWES INC		00000		INV	07/01/2008			7566442-JN08	34349	
1	101E131 920520	CIRCT CT		RENT-VEHC		418.00				
2	101E267 930450	PROSECUTOR		SHIP/MAIL		209.00				
							627.00			
						CHECK TOTAL	627.00			----------
1456 PRESTON FEATHER BUILDING		00000		INV	07/01/2008			06-25-2008	34407	
1	0701L 271130	GEN AGNCY		RESTITUT		10.00				
							10.00			
						CHECK TOTAL	10.00			----------
5346 PERRY PROCTOR		00000		INV	07/01/2008			06-25-2008	34408	
1	0701L 271130	GEN AGNCY		RESTITUT		3.00				
							3.00			
						CHECK TOTAL	3.00			----------
1259 QUILL CORPORATION		00001		INV	07/01/2008			8047839	34355	
1	101E131 726000	CIRCT CT		SUPPLIES		241.89				
							241.89			
						CHECK TOTAL	241.89			----------
2686 RANDY STULTS		0000072000864		INV	06/26/2008			061608	34504	
1	101E721 703040	PLAN ZONE		PER DIEM		40.00				
2	101E721 930500	PLAN ZONE		TRAVEL		8.80				
							48.80			
2686 RANDY STULTS		0000072000865		INV	06/26/2008			062408	34508	
1	101E721 703040	PLAN ZONE		PER DIEM		40.00				
2	101E721 930500	PLAN ZONE		TRAVEL		8.80				
							48.80			
						CHECK TOTAL	97.60			----------
1554 REDWOOD TOXICOLOGY LABORA		00000		INV	07/01/2008			200851	34419	
1	292E662 801030	CHILD CARE		TECHNICAL		160.00				
							160.00			
						CHECK TOTAL	160.00			----------
1792 DARREN RIVARD		00000		INV	07/01/2008			06-25-2008	34409	
1	0701L 271130	GEN AGNCY		RESTITUT		10.00				
							10.00			
						CHECK TOTAL	10.00			----------

CASH ACCOUNT: 0001A 001000 CASH WARRANT: B2008-27 06/30/2008

VENDOR	G/L ACCOUNTS	R	PO	TYPE	DUE DATE	AMOUNT		INVOICE	VOUCHER	CHECK
5347 JESSICA ROGERS		00000		INV	07/01/2008			06-25-2008	34410	
1 0701L	271130	GEN AGNCY		RESTITUT		19.20				
							19.20			
						CHECK TOTAL	19.20			----------
5334 KATHRYN ROGERS		00000		INV	06/20/2008			OVERPYMT	34341	
1 0701L	285010	GEN AGNCY		REFUNDS		80.00				
							80.00			
						CHECK TOTAL	80.00			----------
1867 ROSCOMMON COUNTY		00000		INV	07/01/2008			1157	34424	
1 292E662	930810	CHILD CARE		OTHR INST		474.00				
							474.00			
						CHECK TOTAL	474.00			----------
5317 SAPH, JAY AND KATY		00000		INV	07/01/2008			6-4-08	34421	
1 292E662	930700	CHILD CARE		ROOM BOARD		441.44				
							441.44			
						CHECK TOTAL	441.44			----------
5333 SASSEEN, KATHLEEN		00000		INV	06/18/2008			REFUND	34282	
1 0701L	275000	GEN AGNCY		DUE TXPYR		9.41				
							9.41			
						CHECK TOTAL	9.41			----------
1544 GLORIA SAWYER		00000		INV	07/01/2008			6-13-08	34434	
1 101E133	940010 RDSS	UNSHARED		OUTSIDE		24.00				
							24.00			
1544 GLORIA SAWYER		00000		INV	07/01/2008			6-16-08	34437	
1 101E133	940010 RDSS	UNSHARED		OUTSIDE		24.00				
							24.00			
1544 GLORIA SAWYER		00000		INV	07/01/2008			6-17-08		
1 101E133	930500 RDSS	UNSHARED		TRAVEL		50.00				
							50.00			
1544 GLORIA SAWYER		00000		INV	07/01/2008			6-3-08	34429	
1 292E662	930830	CHILD CARE		CARE GIVER		16.00				
							16.00			
1544 GLORIA SAWYER		00000		INV	07/01/2008			6-3-08A	34432	
1 101E133	940010 RDSS	UNSHARED		OUTSIDE		12.00				
							12.00			
						CHECK TOTAL	126.00			----------
4568 ROBERT SAWYER		0000069000923		INV	06/26/2008			6-19-08	34475	
1 293E689	930500	SOLDIERS		TRAVEL		7.00				
							7.00			
						CHECK TOTAL	7.00			----------

CASH ACCOUNT: 0001A 001000 CASH

WARRANT: B2008-27 06/30/2008

VENDOR	G/L ACCOUNTS	R	PO	TYPE	DUE DATE	AMOUNT		INVOICE	VOUCHER	CHECK
1432 THOMAS SAWYER		00000		INV	07/01/2008			6-13-08	34435	
1	101E133 930500 RDSS	UNSHARED		TRAVEL		64.64				
2	101E133 940010 RDSS	UNSHARED		OUTSIDE		30.00				
							94.64			
1432 THOMAS SAWYER		00000		INV	07/01/2008			6-16-08	34436	
1	101E133 930500 RDSS	UNSHARED		TRAVEL		69.69				
2	101E133 940010 RDSS	UNSHARED		OUTSIDE		30.00				
							99.69			
1432 THOMAS SAWYER		00000		INV	07/01/2008			6-17-08	34440	
1	101E133 930500 RDSS	UNSHARED		TRAVEL		129.28				
2	101E133 940010 RDSS	UNSHARED		OUTSIDE		76.00				
							205.28			
1432 THOMAS SAWYER		00000		INV	07/01/2008			6-3-08	34430	
1	292E662 930500	CHILD CARE		TRAVEL		18.40				
2	292E662 930830	CHILD CARE		CARE GIVER		16.00				
							34.40			
1432 THOMAS SAWYER		00000		INV	07/01/2008			6-3-08A	34431	
1	292E662 930830	CHILD CARE		CARE GIVER		16.00				
2	292E662 930500	CHILD CARE		TRAVEL		18.40				
							34.40			
1432 THOMAS SAWYER		00000		INV	07/01/2008			6-3-08B	34433	
1	101E133 930500 RDSS	UNSHARED		TRAVEL		42.42				
2	101E133 940010 RDSS	UNSHARED		OUTSIDE		17.25				
							59.67			
				CHECK TOTAL			528.08			----------
1275 SCIENTIFIC BRAKE & EQUIPM		00000		INV	07/01/2008			02-29-2008	34365	
1	0701L 271130	GEN AGNCY		RESTITUT		3.25				
							3.25			
1275 SCIENTIFIC BRAKE & EQUIPM		00000		INV	07/01/2008			03-26-2008	34366	
1	0701L 271130	GEN AGNCY		RESTITUT		3.25				
							3.25			
1275 SCIENTIFIC BRAKE & EQUIPM		00000		INV	07/01/2008			04-29-2008	34364	
1	0701L 271130	GEN AGNCY		RESTITUT		1.30				
							1.30			
1275 SCIENTIFIC BRAKE & EQUIPM		00000		INV	07/01/2008			06-25-2008	34369	
1	0701L 271130	GEN AGNCY		RESTITUT		5.20				
							5.20			
				CHECK TOTAL			13.00			----------
1274 SECRETARY OF STATE		00000		INV	07/01/2008			06-25-2008	34362	
1	0701L 228030	GEN AGNCY		DL REINST		220.00				
							220.00			
				CHECK TOTAL			220.00			----------
2939 SIMPLEX GRINNEL LP		0000035100879		INV	06/26/2008			63553692	34460	
1	101E351 920400	JAIL		MAINT SVC		410.63				
							410.63			

CASH ACCOUNT: 0001A 001000 CASH WARRANT: B2008-27 06/30/2008

VENDOR	G/L ACCOUNTS	R	PO	TYPE	DUE DATE	AMOUNT		INVOICE	VOUCHER	CHECK
						CHECK TOTAL	410.63			----------
1281	SIRCHIE FINGER PRINT LAB	0000030100908		INV	06/26/2008			0485023	34445	
	1 101E301 726000	SHERIFF		SUPPLIES		120.00				
							120.00			
						CHECK TOTAL	120.00			----------
5357	SIWECKI CONSTRUCTION INC	0000053700932		INV	06/26/2008			38225	34588	
	1 281E537 920400	AIRPORT		MAINT SVC		1,224.00				
							1,224.00			
						CHECK TOTAL	1,224.00			----------
4668	JESSICA A. SLUSSER	0000069000925		INV	06/26/2008			062208	34441	
	1 101E332 801030	MOTORCYCLE		TECHNICAL		540.00				
							540.00			
						CHECK TOTAL	540.00			----------
3465	SPICY BOB'S ITALIAN EXPRE	0000035100882		INV	06/26/2008			FEB-THRU-APR	34570	
	1 101E351 930700	JAIL		ROOM BOARD		181.00				
							181.00			
						CHECK TOTAL	181.00			----------
3006	SAULT STE MARIE TRIBE - C	00000		INV	07/01/2008			5-31-08	34423	
	1 292E662 930810	CHILD CARE		OTHR INST		240.00				
							240.00			
						CHECK TOTAL	240.00			----------
1286	STATE CHEMICAL MANUFACTUR	0000026500846		INV	06/26/2008			93653277	34495	
	1 637E265 726050	BLDG GRNDS		MAINT SUPP		112.86				
							112.86			
1286	STATE CHEMICAL MANUFACTUR	0000026500847		INV	06/26/2008			93677894	34496	
	1 637E265 726050	BLDG GRNDS		MAINT SUPP		171.34				
							171.34			
1286	STATE CHEMICAL MANUFACTUR	0000026500849		INV	06/26/2008			93746257	34498	
	1 637E265 726050	BLDG GRNDS		MAINT SUPP		113.38				
							113.38			
						CHECK TOTAL	397.58			----------
1874	STATE ELECTRONICS	0000042700863		INV	06/26/2008			OT911	34448	
	1 261E427 920410	EMGR SVCS		SVC CNTRCT		2,432.83				
							2,432.83			
						CHECK TOTAL	2,432.83			----------
1296	STATE OF MICHIGAN	00000		INV	07/01/2008			06-25-08	34361	
	1 0701L 228037	GEN AGNCY		CRIME VICT		1,557.71				
	2 0701L 228042	GEN AGNCY		ST CRT FND		298.00				
	3 0701L 228057	GEN AGNCY		JUROR COMP		230.00				

CASH ACCOUNT: 0001A 001000 CASH WARRANT: B2008-27 06/30/2008

VENDOR	G/L ACCOUNTS	R	PO	TYPE	DUE DATE	AMOUNT		INVOICE	VOUCHER	CHECK
	4 0701L 228058	GEN AGNCY		CIVIL FILE		4,501.00				
	5 0701L 228059	GEN AGNCY		JSTCE SYS		12,890.50				
							19,477.21			
						CHECK TOTAL	19,477.21			----------
1920	STATE OF MICHIGAN	0000026700843		INV	06/26/2008			ELLIS	34474	
	1 101E267 930600	PROSECUTOR		MEMB/DUES		10.00				
							10.00			
						CHECK TOTAL	10.00			----------
2289	STATE OF MICHIGAN BUREAU	00000		INV	07/01/2008			06-25-2008	34391	
	1 0701L 271130	GEN AGNCY		RESTITUT		100.00				
							100.00			
						CHECK TOTAL	100.00			----------
2289	STATE OF MICHIGAN BUREAU	00001		INV	07/01/2008			6-25-2008	34411	
	1 0701L 271130	GEN AGNCY		RESTITUT		130.00				
							130.00			
						CHECK TOTAL	130.00			----------
1307	TARGET INFORMATION MANAGE	00000		INV	07/01/2008			251821	34356	
	1 101E131 726000	CIRCT CT		SUPPLIES		83.87				
							83.87			
						CHECK TOTAL	83.87			----------
1347	TELEPHONE SUPPORT SYSTEMS	00000		INV	07/01/2008			36700	34351	
	1 101E131 920400	CIRCT CT		MAINT SVC		138.00				
							138.00			
						CHECK TOTAL	138.00			----------
1310	THRIFTY PRINT OF GAYLORD	00000		INV	06/18/2008			SUPPLYS	34500	
	1 101E253 726000	TREASURER		SUPPLIES		55.32				
	2 516E253 726000	TRS DELQ		SUPPLIES		55.32				
	3 616E253 726000	HMST EXP		SUPPLIES		55.33				
	4 617E253 726000	TAX FORECL		SUPPLIES		55.33				
							221.30			
						CHECK TOTAL	221.30			----------
1311	DONALD L TOBER	0000072000861		INV	06/26/2008			061608	34502	
	1 101E721 703040	PLAN ZONE		PER DIEM		40.00				
	2 101E721 930500	PLAN ZONE		TRAVEL		10.00				
							50.00			
						CHECK TOTAL	50.00			----------
1312	TOPCOMP COMPUTER SOFTWARE	0000042700861		INV	06/26/2008			200827	34447	
	1 261E427 920410	EMGR SVCS		SVC CNTRCT		1,198.56				
							1,198.56			

CASH ACCOUNT: 0001A 001000 CASH

WARRANT: B2008-27 06/30/2008

VENDOR	G/L ACCOUNTS	R	PO	TYPE	DUE DATE	AMOUNT		INVOICE	VOUCHER	CHECK
					CHECK TOTAL		1,198.56			----------
1315 TREETOPS SYLVAN RESORT		00001		INV	07/01/2008			06-25-2008	34412	
1 0701L	271130	GEN AGNCY		RESTITUT		22.50				
							22.50			
1315 TREETOPS SYLVAN RESORT		00001		INV	07/01/2008			6-25-2008	34413	
1 0701L	271130	GEN AGNCY		RESTITUT		205.00				
							205.00			
					CHECK TOTAL		227.50			----------
1870 UPS		00000		INV	06/20/2008			000X35300248	34340	
1 645E270	930450	HR		SHIP/MAIL		49.72				
							49.72			
					CHECK TOTAL		49.72			----------
1326 VANDERBILT SCHOOLS		00001		INV	06/18/2008			07-DNR-PILT	34264	
1 0701L	274009	GEN AGNCY		UNDST PILT		17.48				
							17.48			
					CHECK TOTAL		17.48			----------
2783 VERIZON		0000042700858		INV	06/26/2008			050108	34453	
1 261E427	726050	EMGR SVCS		MAINT SUPP		320.00				
							320.00			
					CHECK TOTAL		320.00			----------
1122 VERIZON NORTH		0000169901114		INV	06/26/2008			0002230708	34538	
1 588E699	930210	OPERATIONS		TELEPHONE		61.48				
							61.48			
1122 VERIZON NORTH		00001		INV	06/26/2008			0711130608	34530	
1 637E265	930210	BLDG GRNDS		TELEPHONE		58.00				
							58.00			
1122 VERIZON NORTH		0000142700862		INV	06/26/2008			0804070608	34449	
1 261E427	920410	EMGR SVCS		SVC CNTRCT		1,518.18				
							1,518.18			
1122 VERIZON NORTH		00001		INV	06/26/2008			8712280608	34490	
1 637E265	930210	BLDG GRNDS		TELEPHONE		1,238.06				
							1,238.06			
1122 VERIZON NORTH		0000142700855		INV	06/26/2008			998900988168	34456	
1 261E427	920410	EMGR SVCS		SVC CNTRCT		421.87				
							421.87			
					CHECK TOTAL		3,297.59			----------
4613 DANIEL WAGAR		0000072000869		INV	06/26/2008			062408	34511	
1 101E721	703040	PLAN ZONE		PER DIEM		40.00				
2 101E721	930500	PLAN ZONE		TRAVEL		5.60				
							45.60			
					CHECK TOTAL		45.60			----------

CASH ACCOUNT: 0001A 001000 CASH

WARRANT: B2008-27 06/30/2008

VENDOR	G/L ACCOUNTS	R	PO	TYPE	DUE DATE	AMOUNT		INVOICE	VOUCHER	CHECK
2529 WAL MART		0000026700845		INV	06/26/2008			8128	34520	
1 101E267	726000	PROSECUTOR		SUPPLIES		11.00				
							11.00			
					CHECK TOTAL		11.00			----------
5358 WALGREEN COMPANY		0000035100923		INV	06/26/2008			JUNE-1-14	34556	
1 101E351	726035	JAIL		MEDICAL		512.42				
							512.42			
					CHECK TOTAL		512.42			----------
1335 WAL-MART STORES INC		00002		INV	07/01/2008			06-25-2008	34414	
1 0701L	271130	GEN AGNCY		RESTITUT		5.00				
							5.00			
1335 WAL-MART STORES INC		00002		INV	07/01/2008			6-25-2008	34415	
1 0701L	271130	GEN AGNCY		RESTITUT		125.00				
							125.00			
					CHECK TOTAL		130.00			----------
1400 WALMART COMMUNITY BRC		0000021200920		INV	06/26/2008			02314	34564	
1 212E430	726025	ANM CTRL		JANITORIAL		309.71				
							309.71			
					CHECK TOTAL		309.71			----------
5359 WELLER TRUCK PARTS		0000069901122		INV	06/26/2008			6529154	34533	
1 588E699	726050	OPERATIONS		MAINT SUPP		1,295.00				
							1,295.00			
					CHECK TOTAL		1,295.00			----------
1869 WEST PAYMENT CENTER		0000026700842		INV	06/26/2008			816110540	34478	
1 101E267	726200	PROSECUTOR		BOOKS		449.28				
							449.28			
					CHECK TOTAL		449.28			----------
1795 WICKES		00000		INV	07/01/2008			06-25-2008	34416	
1 0701L	271130	GEN AGNCY		RESTITUT		45.00				
							45.00			
					CHECK TOTAL		45.00			----------
5351 WILLIAMS, RONALD		00000		INV	07/01/2008			128X	34427	
1 0701L	271148	GEN AGNCY		RESTITUT		50.00				
							50.00			
					CHECK TOTAL		50.00			----------
2860 WINN TELECOM		0000042700859		INV	06/26/2008			061508	34452	
1 261E427	930210	EMGR SVCS		TELEPHONE		126.40				
							126.40			
2860 WINN TELECOM		0000069901109		INV	06/26/2008			061508AC	34470	

CASH ACCOUNT: 0001A 001000 CASH WARRANT: B2008-27 06/30/2008

VENDOR	G/L ACCOUNTS	R	PO	TYPE	DUE DATE	AMOUNT		INVOICE	VOUCHER	CHECK
	1 588E699 930210	OPERATIONS		TELEPHONE		394.77				
2860	WINN TELECOM	0000021200922		INV	06/26/2008		394.77	06152008AC	34560	
	1 212E430 930210	ANM CTRL		TELEPHONE		110.10				
							110.10			
				CHECK TOTAL			631.27			----------
5250	WOLVERINE HUMAN SERVICES	00000		INV	07/01/2008			5-31-08	34422	
	1 292E662 930810	CHILD CARE		OTHR INST		7,633.13				
							7,633.13			
				CHECK TOTAL			7,633.13			----------
1340	ZAREMBA EQUIPMENT INC	0000053700922		INV	06/26/2008			27188	34578	
	1 281E537 726000	AIRPORT		SUPPLIES		3,000.00				
							3,000.00			
				CHECK TOTAL			3,000.00			----------
242	INVOICES			WARRANT TOTAL		134,446.91	134,446.91			
				CASH ACCOUNT BALANCE			12,755,902.84			

INVOICE REGISTER FOR COUNTY OF OTSEGO
POST DATE / / - 07/09/2008 JOURNALIZED & UNJOURNALIZED OPEN & PAID B2008-28

VEND. INV# / INV REF#	VENDOR / DESCRIPTION / GL DISTRIBUTION		INV DATE / ENTERED BY	DUE DATE	INV AMT	AMT DUE	STATUS	JNLIZED?
622714								
80000001	DUNNS		07/02/2008	07/09/2008	111.00	111.00	0	N
	BUILDING BLUEPRINTS		MFITZGERALD					
	637-265-726.000	SUPPLIES - GENERAL			111.00			
2QTR 08								
80000002	STATE OF MICHIGAN		07/02/2008	07/09/2008	6,434.02	6,434.02	0	N
	MONUMENTATION 2ND QTR 2008		MFITZGERALD					
	701-000-228.040	STATE SURVEY AND REMON			6,434.02			
033588850								
80000003	XEROX CORPORATION		07/02/2008	07/09/2008	382.28	382.28	0	N
	PRINTER CHARGE CLERKS OFFICE		MFITZGERALD					
	101-864-920.410	SERVICE CONTRACTS			382.28			
2318568001								
80000004	KMART		07/02/2008	07/09/2008	9.85	9.85	0	N
	EAR PROTECTORS FOR SHOOTING RANGE		MFITZGERALD					
	101-301-726.000	SUPPLIES - GENERAL			4.93			
	101-351-726.000	SUPPLIES - GENERAL			4.92			
296								
80000005	OTSEGO COUNTY		07/09/2008	07/09/2008	27.10	27.10	0	N
	HEADLIGHT BULB ADMIN VEHICLE		MFITZGERALD					
	645-172-920.400	REPAIRS AND MAINTENANCE SVCS			27.10			
434242195001								
80000006	OFFICE DEPOT INC		07/09/2008	07/09/2008	50.86	50.86	0	N
	ENVELOPES, NOTE PADS, MARKERS, ETC		MFITZGERALD					
	101-301-726.000	SUPPLIES - GENERAL			4.59			
	101-302-726.000	SUPPLIES - GENERAL			32.06			
	101-351-726.000	SUPPLIES - GENERAL			14.21			
033588852								
80000007	XEROX CORPORATION		07/09/2008	07/09/2008	1,259.80	1,259.80	0	N
	ADMIN COPIER MONTH AND QTR PRINTING		MFITZGERALD					
	101-864-920.410	SERVICE CONTRACTS			1,259.80			
033588853								
80000008	XEROX CORPORATION		07/09/2008	07/09/2008	347.45	347.45	0	N
	SHERIFF COPIER MONTH/QTR PRINT CHGS		MFITZGERALD					
	101-864-920.410	SERVICE CONTRACTS			347.45			

VEND. INV# / INV REF#	VENDOR / DESCRIPTION / GL DISTRIBUTION		INV DATE / ENTERED BY	DUE DATE	INV AMT	AMT DUE	STATUS	JNLIZED?
90027								
80000009	ANDERSON, TACKMAN & CO. PLC		07/09/2008	07/09/2008	718.25	718.25	0	N
	FINAL BILL 2007 AUDIT		MFITZGERALD					
	101-223-801.020	PROFESSIONAL			718.25			
07987870 987869								
80000010	ARROW UNIFORM RENTAL		07/09/2008	07/09/2008	181.60	181.60	0	N
	BUILDING/GRNDS MATS JUNE 08		MFITZGERALD					
	637-265-726.046	SUPPLIES - UNIFORM/ACC			181.60			
JUNE 08								
80000011	LINDA CRONK		07/09/2008	07/09/2008	141.66	141.66	0	N
	JUN 08 TRAVEL EXP		MFITZGERALD					
	101-261-930.500	TRAVEL			141.66			
1201								
80000012	MID-STATE WELDING		07/09/2008	07/09/2008	65.00	65.00	0	N
	BRACKETS TO LIGHT POST MAIN ST		MFITZGERALD					
	637-265-940.010	OUTSIDE CONTRACTED SERVICES			65.00			
120827								
80000013	ALLSTATE SIGN & PLAQUE		07/09/2008	07/09/2008	120.79	120.79	0	N
	NO SMOKING SIGNS COURTHOUSE		MFITZGERALD					
	637-265-726.050	REPAIRS AND MAINT SUPLLIES			120.79			
46237								
80000014	GOLDEN AUTO ELECTRIC		07/09/2008	07/09/2008	35.00	35.00	0	N
	CLEAN UP GROUND WIRES 46237		MFITZGERALD					
	637-265-940.010	OUTSIDE CONTRACTED SERVICES			35.00			
788064262/06528								
80000015	GORDON FOOD SERVICES		07/09/2008	07/09/2008	199.00	199.00	0	N
	SOAPS, TP, ETC 788064262	788065281	MFITZGERALD					
	637-265-726.000	SUPPLIES - GENERAL			199.00			
118716								
80000016	LAPPANS OF GAYLORD INC		07/09/2008	07/09/2008	18.50	18.50	0	N
	BELT 118716		MFITZGERALD					
	637-265-726.050	REPAIRS AND MAINT SUPLLIES			18.50			

POST DATE / / - 07/09/2008 JOURNALIZED & UNJOURNALIZED OPEN & PAID

VEND. INV# / INV REF#	VENDOR / DESCRIPTION / GL DISTRIBUTION		INV DATE / ENTERED BY	DUE DATE	INV AMT	AMT DUE	STATUS	JNLIZED?
015 47661								
80000017	CUMMINS BRIDGEWAY LLC		07/09/2008	07/09/2008	450.46	450.46	0	N
	BELT DRIVE 01550206 50182		MFITZGERALD					
	637-265-726.050	REPAIRS AND MAINT SUPLLIES			450.46			
433735549001								
80000018	OFFICE DEPOT INC		07/09/2008	07/09/2008	34.81	34.81	0	N
	PAPER 433735549		MFITZGERALD					
	101-101-726.000	SUPPLIES - GENERAL			34.81			
APRIL 26 2008								
80000019	NORTHERN MICHIGAN HOSPITAL		07/02/2008	07/09/2008	840.00	840.00	0	N
	FOX APRIL 26 2008		MFITZGERALD					
	101-648-930.920	AUTOPSIES			840.00			
06292008								
80000020	TIMOTHY MCPHERSON		07/02/2008	07/09/2008	1,202.00	1,202.00	0	N
	JUNE 29 2008		MFITZGERALD					
	101-332-801.030	TECHNICAL SVCS			702.00			
	101-332-801.020	PROFESSIONAL			500.00			
062908								
80000021	TIMOTHY BURKE		07/03/2008	07/09/2008	513.00	513.00	0	N
	062908		MFITZGERALD					
	101-332-801.030	TECHNICAL SVCS			513.00			
062908								
80000022	PEGG, WILLIAM W		07/03/2008	07/09/2008	469.80	469.80	0	N
	JUNE 29 2008		MFITZGERALD					
	101-332-801.030	TECHNICAL SVCS			405.00			
	101-332-930.500	TRAVEL			64.80			
JUNE 29 2008								
80000023	CLARE MCPHERSON		07/03/2008	07/09/2008	144.00	144.00	0	N
	JUNE 29 2008 BIKE SAFETY		MFITZGERALD					
	101-332-801.030	TECHNICAL SVCS			144.00			
622016								
80000024	DUNNS		07/03/2008	07/09/2008	55.98	55.98	0	N
	622016 LAND USE SERVICES		MFITZGERALD					
	101-000-106.000	SUPPLIES INVENTORY			55.98			

VEND. INV# / INV REF#	VENDOR / DESCRIPTION / GL DISTRIBUTION		INV DATE / ENTERED BY	DUE DATE	INV AMT	AMT DUE	STATUS	JNLIZED?
JUNE 2008								
80000025	STATE OF MICHIGAN		07/03/2008	07/09/2008	3,511.02	3,511.02	0	N
	MONTH END JUNE 2008 CIRC./FAMILY CT		MFITZGERALD					
	701-000-228.042	STATE COURT FUND			370.00			
	701-000-228.037	CRIME VICTIM RIGHTS FUNDS			783.05			
	701-000-228.058	CIVIL FILING FEE FUND			1,349.00			
	701-000-228.059	JUSTICE SYSTEM FUND			888.97			
	701-000-228.060	ATTORNEY GEN OPERATIONS FUND			120.00			
062008PROBATE								
80000026	STATE OF MICHIGAN		07/03/2008	07/09/2008	3,070.60	3,070.60	0	N
	MONTH END PROBATE COURT JUNE 2008		MFITZGERALD					
	701-000-228.042	STATE COURT FUND			160.00			
	701-000-228.037	CRIME VICTIM RIGHTS FUNDS			45.00			
	701-000-228.006	PROBATE COURT SHARED FEES			1,650.60			
	701-000-228.058	CIVIL FILING FEE FUND			1,076.00			
	701-000-228.059	JUSTICE SYSTEM FUND			139.00			
JUNE 2008								
80000027	STATE OF MICHIGAN		07/03/2008	07/09/2008	832.00	832.00	0	N
	PISTOL PERMITS JUNE 2008		MFITZGERALD					
	701-000-228.016	PISTOL PERMITS			832.00			
JUNE 2008								
80000028	STATE OF MICHIGAN		07/03/2008	07/09/2008	6.00	6.00	0	N
	JUNE 2008 MONTH END		MFITZGERALD					
	701-000-228.005	NOTARY EDUCATION & TRAINING			6.00			
JUNE 2008								
80000029	THOMAS J PUDVAN		07/03/2008	07/09/2008	170.00	170.00	0	N
	JUNE 2008 ME		MFITZGERALD					
	101-648-930.210	TELEPHONE			20.00			
	101-648-801.020	PROFESSIONAL			150.00			
KSK9151								
80000030	CDW GOVERNMENT INC		07/03/2008	07/09/2008	29.18	29.18	0	N
	KSK9151 ROLL STAND		MFITZGERALD					
	101-351-726.000	SUPPLIES - GENERAL			29.18			

POST DATE / / - 07/09/2008 JOURNALIZED & UNJOURNALIZED OPEN & PAID

VEND. INV# / INV REF#	VENDOR / DESCRIPTION / GL DISTRIBUTION		INV DATE / ENTERED BY	DUE DATE	INV AMT	AMT DUE	STATUS	JNLIZED?
8054								
80000031	NORTHERN CREDIT BUREAU		07/03/2008	07/09/2008	18.65	18.65	0	N
	8054 REPORTS		MFITZGERALD					
	233-690-930.150	SERVICE CHARGES			18.65			
JUNE 14 08								
80000032	NELSONS FUNERAL HOME		07/03/2008	07/09/2008	175.00	175.00	0	N
	JUNE 2008 TRANSPORT		MFITZGERALD					
	101-648-930.460	TRANSPORTING			175.00			
JUNE 2008								
80000033	CAROL NELSON SNYDER		07/03/2008	07/09/2008	225.00	225.00	0	N
	JUNE 2008		MFITZGERALD					
	101-648-801.020	PROFESSIONAL			225.00			
ANNUAL FEE								
80000034	DEBRA WOJTKOWIAK		07/03/2008	07/09/2008	575.00	575.00	0	N
	JUNE 2007-JUNE 2008 ANNUAL FEE		MFITZGERALD					
	101-648-801.020	PROFESSIONAL			575.00			
JUNE 17 2008								
80000035	H CHARLES NELSON		07/03/2008	07/09/2008	150.00	150.00	0	N
	JUNE 17 2008		MFITZGERALD					
	101-648-801.020	PROFESSIONAL			150.00			
JUNE 2008								
80000036	IMPREST CASH-SUSAN PREMO		07/03/2008	07/09/2008	112.59	112.59	0	N
	IMPREST CASH ADMINISTRATION		MFITZGERALD					
	701-000-232.001	GOLF OUTING			15.00			
	701-000-232.001	GOLF OUTING			44.00			
	701-000-232.001	GOLF OUTING			33.60			
	101-101-726.000	SUPPLIES - GENERAL			19.99			
MAY 30 2008								
80000037	MUTUAL OF OMAHA		07/03/2008	07/09/2008	134.18	134.18	0	N
	MAY 30 2008 G2X240A		MFITZGERALD					
	704-000-229.001	SOCIAL SECURITY TAXES			134.18			
3778339								
80000038	MICHIGAN PATHOLOGY SPECIALISTS		07/03/2008	07/09/2008	1,275.00	1,275.00	0	N
	JUNE 2008 BODE		MFITZGERALD					
	101-648-930.920	AUTOPSIES			1,275.00			

VEND. INV# / INV REF#	VENDOR / DESCRIPTION / GL DISTRIBUTION		INV DATE / ENTERED BY	DUE DATE	INV AMT	AMT DUE	STATUS	JNLIZED?
REIMBURSE								
80000039	JOHN PLATKO		07/03/2008	07/09/2008	203.36	203.36	0	N
	REIMBURSEMENT EQUIPMENT		MFITZGERALD					
	212-430-930.210	TELEPHONE			68.90			
	212-430-726.046	SUPPLIES - UNIFORM/ACC			134.46			
153470								
80000040	CUMMINGS, MCCLOREY, DAVIS &	ACHO P	07/03/2008	07/09/2008	1,014.00	1,014.00	0	N
	153470		MFITZGERALD					
	260-130-801.025	PROFESSIONAL SVCS			1,014.00			
1052475								
80000041	JOHNSON, ROSATI, LABARGE, ASELTYNE		07/03/2008	07/09/2008	2,818.98	2,818.98	0	N
	1052475		MFITZGERALD					
	260-130-801.025	PROFESSIONAL SVCS			2,818.98			
7525018JN08								
80000042	PITNEY BOWES INC		07/03/2008	07/09/2008	495.00	495.00	0	N
	JUNE 2008 7525018 RENTAL PYMT		MFITZGERALD					
	101-864-920.410	SERVICE CONTRACTS			495.00			
622336								
80000043	DUNNS		07/03/2008	07/09/2008	559.80	559.80	0	N
	622336 PAPER FOR ADMIN		MFITZGERALD					
	101-000-106.000	SUPPLIES INVENTORY			559.80			
153469								
80000044	CUMMINGS, MCCLOREY, DAVIS &	ACHO P	07/03/2008	07/09/2008	2,847.00	2,847.00	0	N
	153469 GENERAL		MFITZGERALD					
	260-130-801.025	PROFESSIONAL SVCS			2,847.00			
5454528179								
80000045	SHRED-IT GRAND RAPIDS		07/03/2008	07/09/2008	55.00	55.00	0	N
	54545428179		MFITZGERALD					
	101-101-726.000	SUPPLIES - GENERAL			27.50			
	101-301-726.000	SUPPLIES - GENERAL			27.50			
4179								
80000046	EMPIRIC SOLUTIONS INC		07/03/2008	07/09/2008	4,513.70	4,513.70	0	N
	JUNE 2008 4179		MFITZGERALD					
	101-228-920.400	REPAIRS AND MAINTENANCE SVCS			3,396.60			
	249-371-726.050	REPAIRS AND MAINT SUPLLIES			22.50			
	645-172-920.400	REPAIRS AND MAINTENANCE SVCS			7.20			
	101-351-920.400	REPAIRS AND MAINTENANCE SVCS			254.70			
	101-301-920.400	REPAIRS AND MAINTENANCE SVCS			7.20			

VEND. INV# / INV REF#	VENDOR / DESCRIPTION / GL DISTRIBUTION		INV DATE / ENTERED BY	DUE DATE	INV AMT	AMT DUE	STATUS	JNLIZED?
4179								
80000046	EMPIRIC SOLUTIONS INC		*** CONTINUED ***					
	101-131-940.010	OUTSIDE CONTRACTED SERVICES			45.50			
	402-901-970.450	PROPERTY - SOFTWARE			780.00			
4180								
80000047	EMPIRIC SOLUTIONS INC		07/03/2008	07/09/2008	3,180.00	3,180.00	0	N
	4180 FEES		MFITZGERALD					
	101-228-801.030	TECHNICAL SVCS			1,940.00			
	101-131-801.030	TECHNICAL SVCS			1,240.00			
JUNE 29 2008								
80000048	MIKE JAROSZ		07/03/2008	07/09/2008	324.00	324.00	0	N
	COURSE JUNE 29 2008		MFITZGERALD					
	101-332-801.030	TECHNICAL SVCS			324.00			

# of Invoices: 48 # Due: 48 TOTALS: 40,107.27 40,107.27

--- TOTALS BY FUND ---

101	17,106.71	17,106.71
212	203.36	203.36
233	18.65	18.65
249	22.50	22.50
260	6,679.98	6,679.98
402	780.00	780.00
637	1,181.35	1,181.35
645	34.30	34.30
701	13,946.24	13,946.24
704	134.18	134.18

--- TOTALS BY DEPT/ACTIVITY ---

000	14,696.20	14,696.20
101	82.30	82.30
130	6,679.98	6,679.98
131	1,285.50	1,285.50
172	34.30	34.30
223	718.25	718.25
228	5,336.60	5,336.60
261	141.66	141.66
265	1,181.35	1,181.35
301	44.22	44.22
302	32.06	32.06
332	2,652.80	2,652.80
351	303.01	303.01
371	22.50	22.50

VEND. INV# / INV REF#	VENDOR / DESCRIPTION / GL DISTRIBUTION	INV DATE / ENTERED BY	DUE DATE	INV AMT	AMT DUE	STATUS	JNLIZED?
--- TOTALS BY DEPT/ACTIVITY (continued) ---							
	430			203.36	203.36		
	648			3,410.00	3,410.00		
	690			18.65	18.65		
	864			2,484.53	2,484.53		
	901			780.00	780.00		

RESOLUTION NO. OCR 08-20
Proclaiming July 13-19, 2008 as
"Road Rage Awareness Week"

Otsego County Board of Commissioners
July 8, 2008

WHEREAS, Reaching Out Against Road Rage (R.O.A.R.R.), a non-profit (501c3 tax exempt) organization located in Muskegon County, has a mission, which consists of the three P's: **prevention** of Road rage; **protection** and support of victims against Road Rage; and the **promotion** of life by saving lives; and

WHEREAS, to achieve this mission R.O.A.R.R. is promoting awareness and education on the prevention of Road Rage; working in an effort to reduce the number of incidents; and advocate support and assistance to victims and their families in their recovery process; and

WHEREAS, The National Highway Traffic and Safety Administration (NHTSA) defines Road Rage as "an assault with a motor vehicle or other dangerous weapon by the operator or passenger(s) of another motor vehicle or an assault precipitated by an incident that occurred on a roadway"; and

WHEREAS, a study done by the AAA Foundation indicates an average of at least 1,500 men, women, and children are injured or killed each year in the United States from the violent acts of Road Rage; and

WHEREAS, R.O.A.R.R., understands that to solve a problem, we must first be aware of the problem. Road Rage is a growing problem in Michigan as well as in our country; and

WHEREAS, R.O.A.R.R. recognizes that young and older drivers face danger because of rage in other drivers and themselves; and

WHEREAS, we must stop the killing, injuries, and mental anguish; we must work together as a community; and reprogram the destructive attitudes and behaviors that cause Road Rage, now, therefore, be it,

RESOLVED, that the organization R.O.A.R.R. Board of Directors, Kay Shabazz, President, and other individuals and organizations are partnered in a "Road Rage Awareness Campaign" to bring closure to the escalating Road Rage problem; and be it further

RESOLVED, that we urge support and collaboration to adopt the week of July 13-19 as "Road Rage Awareness Week", and be it further,

RESOLVED, that July 13-19, 2008, is proclaimed as "Road Rage Awareness Week".